CISPR 25

Edition 4.0 2016-10

INTERNATIONAL STANDARD

NORME INTERNATIONALE

colour inside

INTERNATIONAL SPECIAL COMMITTEE ON RADIO INTERFERENCE
COMITÉ INTERNATIONAL SPÉCIAL DES PERTURBATIONS RADIOÉLECTRIQUES

Vehicles, boats and internal combustion engines – Radio disturbance characteristics – Limits and methods of measurement for the protection of on-board receivers

Véhicules, bateaux et moteurs à combustion interne – Caractéristiques des perturbations radioélectriques – Limites et méthodes de mesure pour la protection des récepteurs embarqués



THIS PUBLICATION IS COPYRIGHT PROTECTED

Copyright © 2016 IEC, Geneva, Switzerland

All rights reserved. Unless otherwise specified, no part of this publication may be reproduced or utilized in any form or by any means, electronic or mechanical, including photocopying and microfilm, without permission in writing from either IEC or IEC's member National Committee in the country of the requester. If you have any questions about IEC copyright or have an enquiry about obtaining additional rights to this publication, please contact the address below or your local IEC member National Committee for further information.

Droits de reproduction réservés. Sauf indication contraire, aucune partie de cette publication ne peut être reproduite ni utilisée sous quelque forme que ce soit et par aucun procédé, électronique ou mécanique, y compris la photocopie et les microfilms, sans l'accord écrit de l'IEC ou du Comité national de l'IEC du pays du demandeur. Si vous avez des questions sur le copyright de l'IEC ou si vous désirez obtenir des droits supplémentaires sur cette publication, utilisez les coordonnées ci-après ou contactez le Comité national de l'IEC de votre pays de résidence.

IEC Central Office
3, rue de Varembé
CH-1211 Geneva 20
Switzerland

Tel.: +41 22 919 02 11
Fax: +41 22 919 03 00
info@iec.ch
www.iec.ch

About the IEC
The International Electrotechnical Commission (IEC) is the leading global organization that prepares and publishes International Standards for all electrical, electronic and related technologies.

About IEC publications
The technical content of IEC publications is kept under constant review by the IEC. Please make sure that you have the latest edition, a corrigenda or an amendment might have been published.

IEC Catalogue - webstore.iec.ch/catalogue
The stand-alone application for consulting the entire bibliographical information on IEC International Standards, Technical Specifications, Technical Reports and other documents. Available for PC, Mac OS, Android Tablets and iPad.

IEC publications search - www.iec.ch/searchpub
The advanced search enables to find IEC publications by a variety of criteria (reference number, text, technical committee,…). It also gives information on projects, replaced and withdrawn publications.

IEC Just Published - webstore.iec.ch/justpublished
Stay up to date on all new IEC publications. Just Published details all new publications released. Available online and also once a month by email.

Electropedia - www.electropedia.org
The world's leading online dictionary of electronic and electrical terms containing 20 000 terms and definitions in English and French, with equivalent terms in 15 additional languages. Also known as the International Electrotechnical Vocabulary (IEV) online.

IEC Glossary - std.iec.ch/glossary
65 000 electrotechnical terminology entries in English and French extracted from the Terms and Definitions clause of IEC publications issued since 2002. Some entries have been collected from earlier publications of IEC TC 37, 77, 86 and CISPR.

IEC Customer Service Centre - webstore.iec.ch/csc
If you wish to give us your feedback on this publication or need further assistance, please contact the Customer Service Centre: csc@iec.ch.

A propos de l'IEC
La Commission Electrotechnique Internationale (IEC) est la première organisation mondiale qui élabore et publie des Normes internationales pour tout ce qui a trait à l'électricité, à l'électronique et aux technologies apparentées.

A propos des publications IEC
Le contenu technique des publications IEC est constamment revu. Veuillez vous assurer que vous possédez l'édition la plus récente, un corrigendum ou amendement peut avoir été publié.

Catalogue IEC - webstore.iec.ch/catalogue
Application autonome pour consulter tous les renseignements bibliographiques sur les Normes internationales, Spécifications techniques, Rapports techniques et autres documents de l'IEC. Disponible pour PC, Mac OS, tablettes Android et iPad.

Recherche de publications IEC - www.iec.ch/searchpub
La recherche avancée permet de trouver des publications IEC en utilisant différents critères (numéro de référence, texte, comité d'études,…). Elle donne aussi des informations sur les projets et les publications remplacées ou retirées.

IEC Just Published - webstore.iec.ch/justpublished
Restez informé sur les nouvelles publications IEC. Just Published détaille les nouvelles publications parues. Disponible en ligne et aussi une fois par mois par email.

Electropedia - www.electropedia.org
Le premier dictionnaire en ligne de termes électroniques et électriques. Il contient 20 000 termes et définitions en anglais et en français, ainsi que les termes équivalents dans 15 langues additionnelles. Egalement appelé Vocabulaire Electrotechnique International (IEV) en ligne.

Glossaire IEC - std.iec.ch/glossary
65 000 entrées terminologiques électrotechniques, en anglais et en français, extraites des articles Termes et Définitions des publications IEC parues depuis 2002. Plus certaines entrées antérieures extraites des publications des CE 37, 77, 86 et CISPR de l'IEC.

Service Clients - webstore.iec.ch/csc
Si vous désirez nous donner des commentaires sur cette publication ou si vous avez des questions contactez-nous: csc@iec.ch.

CONTENTS

FOREWORD 8
INTRODUCTION 10
1 Scope 11
2 Normative references 12
3 Terms and definitions 13
4 Requirements common to vehicle and component/module emissions measurements 17
4.1 General test requirements 17
4.1.1 Categories of disturbance sources (as applied in the test plan) 17
4.1.2 Test plan 17
4.1.3 Determination of conformance of equipment under test (EUT) with limits 17
4.1.4 Operating conditions 18
4.1.5 Test report 19
4.2 Shielded enclosure 19
4.3 Absorber-lined shielded enclosure (ALSE) 19
4.3.1 General 19
4.3.2 Size 19
4.3.3 Objects in ALSE 19
4.3.4 ALSE performance validation 20
4.4 Measuring instrument 20
4.4.1 General 20
4.4.2 Spectrum analyser parameters 20
4.4.3 Scanning receiver parameters 23
4.5 Power supply 25
5 Measurement of emissions received by an antenna on the same vehicle 26
5.1 Antenna measuring system 26
5.1.1 Type of antenna 26
5.1.2 Measuring system requirements 26
5.2 Method of measurement 28
5.3 Test setup for vehicle in charging mode 30
5.3.1 General 30
5.3.2 AC power charging without communication 30
5.3.3 AC or DC power charging with communication line(s) or with signal line(s) 33
5.4 Examples of limits for vehicle radiated disturbances 37
6 Measurement of components and modules 39
6.1 General 39
6.2 Test equipment 39
6.2.1 Reference ground plane 39
6.2.2 Power supply and AN 40
6.2.3 Load simulator 40
6.3 Conducted emissions from components/modules – Voltage method 41
6.3.1 General 41
6.3.2 Test setup 41
6.3.3 Test procedure 42

6.3.4 Limits for conducted disturbances from components/modules – Voltage method 46
6.4 Conducted emissions from components/modules – Current probe method 49
6.4.1 Test setup 49
6.4.2 Test procedure 49
6.4.3 Limits for conducted disturbances from components/modules – Current probe method 52
6.5 Radiated emissions from components/modules – ALSE method 54
6.5.1 General 54
6.5.2 Test setup 54
6.5.3 Test procedure 57
6.5.4 Limits for radiated disturbances from components/modules – ALSE method 62
6.6 Radiated emissions from components/modules – TEM cell method 65
6.7 Radiated emissions from components/modules – Stripline method 65
Annex A (informative) Flow chart for checking the applicability of CISPR 25 66
Annex B (normative) Antenna matching unit – Vehicle test 67
B.1 Antenna matching unit parameters (150 kHz to 6,2 MHz) 67
B.2 Antenna matching unit – Verification 67
B.2.1 General 67
B.2.2 Gain measurement 67
B.2.3 Test procedure 67
B.3 Impedance measurement 67
Annex C (informative) Sheath-current suppressor 69
C.1 General information 69
C.2 Suppressor construction 69
Annex D (informative) Guidance for the determination of the noise floor of active vehicle antennas in the AM and FM range 70
Annex E (normative) Artificial networks (AN), artificial mains networks (AMN) and asymmetric artificial networks (AAN) 73
E.1 General 73
E.2 Artificial networks (AN) 73
E.2.1 Component powered by LV 73
E.2.2 Component powered by HV 75
E.2.3 Component involved in charging mode connected to DC power mains 77
E.2.4 Vehicle in charging mode connected to DC power mains 77
E.3 Artificial mains networks (AMN) 77
E.3.1 Component AMN 77
E.3.2 Vehicle in charging mode connected to AC power mains 77
E.4 Asymmetric artificial network (AAN) 78
E.4.1 General 78
E.4.2 Symmetric communication lines 78
E.4.3 PLC on power lines 79
E.4.4 PLC (technology) on control pilot 80
Annex F (informative) Radiated emissions from components/modules – TEM cell method 82
F.1 General 82
F.2 Test setup 83
F.2.1 Setup with major field emission from the wiring harness 83

F.2.2 Setup with major field emissions from the EUT 84
F.2.3 Power supply and AN 84
F.2.4 Signal/control line filters 85
F.3 Test procedure 86
F.4 Limits for radiated disturbances from components/modules – TEM cell method 87
F.5 TEM cell design 89
Annex G (informative) Radiated emissions from components/modules – Stripline method 91
G.1 General 91
G.2 Test setup 91
G.2.1 General 91
G.2.2 Stripline impedance matching 91
G.2.3 Location of the EUT 92
G.2.4 Location and length of the test harness 92
G.2.5 Location of the load simulator 92
G.3 Test procedure 92
G.4 Limits for radiated emissions from components/modules – Stripline method 93
G.5 Stripline design 96
Annex H (informative) Interference to mobile radio communication in the presence of impulsive noise – Methods of judging degradation 99
H.1 General 99
H.2 Survey of methods of judging degradation to radio channel 99
H.2.1 General 99
H.2.2 Subjective tests 99
H.2.3 Objective tests 100
H.2.4 Conclusions relating to judgement of degradation 101
Annex I (normative) Test methods for shielded power supply systems for high voltages in electric and hybrid vehicles 102
I.1 General 102
I.2 Conducted emission from components/modules on HV power lines – Voltage method 102
I.2.1 Ground plane arrangement 102
I.2.2 Test set-up 103
I.2.3 Limits for conducted emission – Voltage method 108
I.3 Conducted emission from components/modules on HV power lines – current probe method 110
I.3.1 Reference ground plane arrangement 110
I.3.2 Test setup 110
I.3.3 Limits for conducted emission – current probe method 115
I.4 Radiated emissions from components/modules – ALSE method 115
I.4.1 Reference ground plane arrangement 115
I.4.2 Test setup 115
I.4.3 Limits for radiated emissions – ALSE method 120
I.5 Coupling between HV and LV systems 120
I.5.1 General 120
I.5.2 Measurement based on test setups defined in Clause 6 120
I.5.3 Measurement of the HV-LV coupling attenuation 126
Annex J (informative) ALSE performance validation 150 kHz to 1 GHz 129
J.1 General 129

J.2 Reference measurement method 131
J.2.1 Overview 131
J.2.2 Equipment 131
J.2.3 Procedure 133
J.2.4 Requirements 137
J.3 Modelled long wire antenna method 137
J.3.1 Overview 137
J.3.2 Equipment 138
J.3.3 Procedure 140
J.3.4 Requirements 149
Annex K (informative) Items under consideration 151
K.1 General 151
K.2 Measurement techniques and limits 151
K.3 Measurement uncertainty 151
K.4 Reconsideration of the Scope of the standard 151
K.5 Digital Service bands 151
K.6 Reorganizing the document into separate parts similar to CISPR-16 document series 151
Bibliography 152

Figure 1 – Method of determination of conformance for all frequency bands 18
Figure 2 – Example of gain curve 27
Figure 3 – Vehicle-radiated emissions – Example for test layout (end view with monopole antenna) 29
Figure 4 – Example of test setup for vehicle with plug located on vehicle side (AC powered without communication) 31
Figure 5 – Example of test setup for vehicle with plug located front / rear of vehicle (AC powered without communication) 32
Figure 6 – Example of test setup for vehicle with plug located on vehicle side (AC or DC powered with communication) 35
Figure 7 – Example of test setup for vehicle with plug located front /rear of vehicle (AC or DC powered with communication) 36
Figure 8 – Average limit for radiated disturbance from vehicles 39
Figure 9 – Conducted emissions – Example of test setup for EUT with power return line remotely grounded 43
Figure 10 – Conducted emissions – Example of test setup for EUT with power return line locally grounded 44
Figure 11 – Conducted emissions – Example of test setup for alternators and generators 45
Figure 12 – Conducted emissions – Example of test setup for ignition system components 46
Figure 13 – Conducted emissions – Example of test setup for current probe measurements 51
Figure 14 – Test harness bending requirements 56
Figure 15 – Example of test setup – Rod antenna 58
Figure 16 – Example of test setup – Biconical antenna 59
Figure 17 – Example of test setup – Log-periodic antenna 60
Figure 18 – Example of test setup – Above 1 GHz 61
Figure 19 – Example of average limit for radiated disturbances from components 64

Figure A.1 – Flow chart for checking the applicability of this standard 66
Figure B.1 – Verification setup 68
Figure C.1 – Characteristic S_{21} of the ferrite core 69
Figure D.1 – Vehicle test setup for equipment noise measurement in the AM/FM range 71
Figure D.2 – Vehicle test setup for antenna noise measurement in the AM/FM range 72
Figure E.1 – Example of 5 μH AN schematic 74
Figure E.2 – Characteristics of the AN impedance Z_{PB} 74
Figure E.3 – Example of 5 μH HV AN schematic 76
Figure E.4 – Example of 5 μH HV AN combination in a single shielded box 76
Figure E.5 – Impedance matching network attached between HV ANs and EUT 77
Figure E.6 – Example of an AAN for symmetric communication lines 79
Figure E.7 – Example of AAN circuit of PLC on AC or DC powerlines 80
Figure E.8 – Example of an AAN circuit for PLC on pilot line 81
Figure F.1 – TEM cell (example) 82
Figure F.2 – Example of arrangement of leads in the TEM cell and to the connector panel 83
Figure F.3 – Example of the arrangement of the connectors, the lead frame and the dielectric support 84
Figure F.4 – Example for the required minimum attenuation of the signal / control line filters 85
Figure F.5 – Setup for measurement of the filter attenuation 85
Figure F.6 – Example of the TEM cell method test setup 86
Figure F.7 – TEM cell 89
Figure G.1 – Example of a basic stripline test setup in a shielded enclosure 93
Figure G.2 – Example for a 50 Ω stripline 97
Figure G.3 – Example for a 90 Ω stripline 98
Figure I.1 – Conducted emission – Example of test setup for EUTs with shielded power supply systems 105
Figure I.2 – Conducted emission – Example of test setup for EUTs with shielded power supply systems with electric motor attached to the bench 106
Figure I.3 – Conducted emission – Example of test setup for EUTs with shielded power supply systems and inverter/charger device 107
Figure I.4 – Conducted emission – Example of test setup current probe measurement on HV lines for EUTs with shielded power supply systems 112
Figure I.5 – Conducted emission – Example of test setup current probe measurement on HV lines for EUTs with shielded power supply systems with electric motor attached to the bench 113
Figure I.6 – Conducted emission – Example of test setup current probe measurement on HV lines for EUTs with shielded power supply systems and inverter/charger device 114
Figure I.7 – Radiated emission – Example of test setup measurement with biconical antenna for EUTs with shielded power supply systems 117
Figure I.8 – Radiated emission – Example of test setup measurement with biconical antenna for EUTs with shielded power supply systems with electric motor attached to the bench 118
Figure I.9 – Radiated emission – Example of test setup measurement with biconical antenna for EUTs with shielded power supply systems and inverter/charger device 119
Figure I.10 – Test setup for calibration of the test signal 121

Figure I.11 – Example of test setup for conducted emissions – Voltage method – Measurement on LV ports with injection on HV supply ports 122
Figure I.12 – Example of test setup for conducted emissions – Current probe method – Measurement on LV ports with injection on HV supply ports 123
Figure I.13 – Example of test setup for radiated emissions – ALSE method – Measurement with biconical antenna with injection on HV supply ports 125
Figure I.14 – Test setup for EUT S_{21} measurements 127
Figure I.15 – Examples of requirements for coupling attenuation, a_C 128
Figure J.1 – Examples of typical ALSE influence parameters over the 10 MHz to 100 MHz frequency range 130
Figure J.2 – Visual representation of ALSE performance validation process 131
Figure J.3 – Example of construction of a transmitting monopole 132
Figure J.4 – Side view of the antenna configuration for reference measurement below 30 MHz 134
Figure J.5 – Top view of antenna configuration for reference measurement 30 MHz and above (with the biconical antenna shown as example) 135
Figure J.6 – Side view of antenna configuration for reference measurement 30 MHz and above (with the biconical antenna shown as example) 135
Figure J.7 – Top view of antenna configuration for the ALSE measurement below 30 MHz 136
Figure J.8 – Metallic sheet angles used as support for the rod 139
Figure J.9 – Radiator side view 50 Ω terminations 139
Figure J.10 – Photo of the radiator mounted on the ground reference plane 139
Figure J.11 – Example VSWR measured from four radiation sources (without 10 dB attenuator) 140
Figure J.12 – Example setup for ALSE equivalent field strength measurement (rod antenna shown for the frequency range below 30 MHz) 142
Figure J.13 – MoM-modell for the frequency range 30 MHz to 200 MHz 144

Table 1 – Spectrum analyser parameters 22
Table 2 – Scanning receiver parameters 24
Table 3 – Antenna types 26
Table 4 – Example for limits of disturbance – Complete vehicle 37
Table 5 – Examples of limits for conducted disturbances – Voltage method 48
Table 6 – Examples of limits for conducted disturbances – Current probe method 53
Table 7 – Examples of limits for radiated disturbances – ALSE method 63
Table E.1 – Magnitude of the AN impedance Z_{PB} 75
Table F.1 – Examples of limits for radiated disturbances – TEM cell method 88
Table F.2 – Dimensions for TEM cells 90
Table G.1 – Examples of limits for radiated disturbances – Stripline method 95
Table I.1 – Example for HV limits for conducted voltage measurements at shielded power supply devices (HV-LV decoupling class A5) 109
Table I.2 – Example of configurations for equipment without negative LV line 127
Table I.3 – Example of configurations for equipment with negative LV line 127
Table I.4 – Examples of requirements for minimum coupling attenuation, a_C 128
Table J.1 – Reference data to be used for chamber validation 145

INTERNATIONAL ELECTROTECHNICAL COMMISSION

INTERNATIONAL SPECIAL COMMITTEE ON RADIO INTERFERENCE

_____

VEHICLES, BOATS AND INTERNAL COMBUSTION ENGINES – RADIO DISTURBANCE CHARACTERISTICS – LIMITS AND METHODS OF MEASUREMENT FOR THE PROTECTION OF ON-BOARD RECEIVERS

FOREWORD

1) The International Electrotechnical Commission (IEC) is a worldwide organization for standardization comprising all national electrotechnical committees (IEC National Committees). The object of IEC is to promote international co-operation on all questions concerning standardization in the electrical and electronic fields. To this end and in addition to other activities, IEC publishes International Standards, Technical Specifications, Technical Reports, Publicly Available Specifications (PAS) and Guides (hereafter referred to as "IEC Publication(s)"). Their preparation is entrusted to technical committees; any IEC National Committee interested in the subject dealt with may participate in this preparatory work. International, governmental and non-governmental organizations liaising with the IEC also participate in this preparation. IEC collaborates closely with the International Organization for Standardization (ISO) in accordance with conditions determined by agreement between the two organizations.
2) The formal decisions or agreements of IEC on technical matters express, as nearly as possible, an international consensus of opinion on the relevant subjects since each technical committee has representation from all interested IEC National Committees.
3) IEC Publications have the form of recommendations for international use and are accepted by IEC National Committees in that sense. While all reasonable efforts are made to ensure that the technical content of IEC Publications is accurate, IEC cannot be held responsible for the way in which they are used or for any misinterpretation by any end user.
4) In order to promote international uniformity, IEC National Committees undertake to apply IEC Publications transparently to the maximum extent possible in their national and regional publications. Any divergence between any IEC Publication and the corresponding national or regional publication shall be clearly indicated in the latter.
5) IEC itself does not provide any attestation of conformity. Independent certification bodies provide conformity assessment services and, in some areas, access to IEC marks of conformity. IEC is not responsible for any services carried out by independent certification bodies.
6) All users should ensure that they have the latest edition of this publication.
7) No liability shall attach to IEC or its directors, employees, servants or agents including individual experts and members of its technical committees and IEC National Committees for any personal injury, property damage or other damage of any nature whatsoever, whether direct or indirect, or for costs (including legal fees) and expenses arising out of the publication, use of, or reliance upon, this IEC Publication or any other IEC Publications.
8) Attention is drawn to the Normative references cited in this publication. Use of the referenced publications is indispensable for the correct application of this publication.
9) Attention is drawn to the possibility that some of the elements of this IEC Publication may be the subject of patent rights. IEC shall not be held responsible for identifying any or all such patent rights.

International Standard CISPR 25 has been prepared by CISPR subcommittee D: Electromagnetic disturbances related to electric/electronic equipment on vehicles and internal combustion engine powered devices.

This fourth edition cancels and replaces the third edition published in 2008. This edition constitutes a technical revision.

This edition includes the following significant technical changes with respect to the previous edition:

a) inclusion of charging mode for electric vehicles (EV) and plug-in electric vehicles (PHEV),
b) the methods for chamber validation have been included,

c) test methods for shielded power supply systems for high voltages for electric and hybrid electric vehicles have been included,

d) overall improvement.

The text of this standard is based on the following documents:

FDIS	Report on voting
CISPR/D/432/FDIS	CISPR/D/435/RVD

Full information on the voting for the approval of this standard can be found in the report on voting indicated in the above table.

This publication has been drafted in accordance with the ISO/IEC Directives, Part 2.

The committee has decided that the contents of this publication will remain unchanged until the stability date indicated on the IEC web site under "http://webstore.iec.ch" in the data related to the specific publication. At this date, the publication will be

- reconfirmed,
- withdrawn,
- replaced by a revised edition, or
- amended.

IMPORTANT – The 'colour inside' logo on the cover page of this publication indicates that it contains colours which are considered to be useful for the correct understanding of its contents. Users should therefore print this document using a colour printer.

INTRODUCTION

This International Standard is designed to protect on-board receivers from disturbances produced by conducted and radiated emissions arising in a vehicle.

Test procedures and limits given are intended to provide provisional control of vehicle radiated emissions, as well as component/module conducted/radiated emissions of long and short duration.

To accomplish this end, this standard:

- establishes a test method for measuring the electromagnetic emissions from the electrical system of a vehicle;
- sets limits for the electromagnetic emissions from the electrical system of a vehicle;
- establishes test methods for testing on-board components and modules independent from the vehicle;
- sets limits for electromagnetic emissions from components to prevent objectionable disturbance to on-board receivers;
- classifies automotive components by disturbance duration to establish a range of limits.

NOTE Component tests are not intended to replace vehicle tests. Exact correlation between component and vehicle test performance is dependent on component mounting location, harness length, routing and grounding, as well as antenna location. Components can be evaluated with component testing prior to actual vehicle availability.

VEHICLES, BOATS AND INTERNAL COMBUSTION ENGINES – RADIO DISTURBANCE CHARACTERISTICS – LIMITS AND METHODS OF MEASUREMENT FOR THE PROTECTION OF ON-BOARD RECEIVERS

1 Scope

This International Standard contains limits and procedures for the measurement of radio disturbances in the frequency range of 150 kHz to 2 500 MHz. The standard applies to any electronic/electrical component intended for use in vehicles, trailers and devices. Refer to International Telecommunications Union (ITU) publications for details of frequency allocations. The limits are intended to provide protection for receivers installed in a vehicle from disturbances produced by components/modules in the same vehicle. The method and limits for a complete vehicle (whether connected to the power mains for charging purposes or not) are in Clause 5 and the methods and limits for components/modules are in Clause 6. Only a complete vehicle test can be used to determine the component compatibility with respect to a vehicle's limit.

The receiver types to be protected are, for example, broadcast receivers (sound and television), land mobile radio, radio telephone, amateur, citizens' radio, Satellite Navigation (GPS etc.), Wi-Fi and Bluetooth. For the purpose of this standard, a vehicle is a machine, which is self-propelled by an internal combustion engine, electric means, or both. Vehicles include (but are not limited to) passenger cars, trucks, agricultural tractors and snowmobiles. Annex A provides guidance in determining whether this standard is applicable to particular equipment.

This International Standard does not include protection of electronic control systems from radio frequency (RF) emissions or from transient or pulse-type voltage fluctuations. These subjects are included in ISO publications.

The limits in this standard are recommended and subject to modification as agreed between the vehicle manufacturer and the component supplier. This standard is also intended to be applied by manufacturers and suppliers of components and equipment which are to be added and connected to the vehicle harness or to an on-board power connector after delivery of the vehicle.

Since the mounting location, vehicle body construction and harness design can affect the coupling of radio disturbances to the on-board radio, Clause 6 of this standard defines multiple limit levels. The level class to be used (as a function of frequency band) is agreed upon between the vehicle manufacturer and the component supplier.

This standard defines test methods for use by Vehicle Manufacturers and Suppliers, to assist in the design of vehicles and components and ensure controlled levels of on-board radio frequency emissions.

Vehicle test limits are provided for guidance and are based on a typical radio receiver using the antenna provided as part of the vehicle, or a test antenna if a unique antenna is not specified. The frequency bands that are defined are not applicable to all regions or countries of the world. For economic reasons, the vehicle manufacturer is free to identify what frequency bands are applicable in the countries in which a vehicle will be marketed and which radio services are likely to be used in that vehicle.

As an example, many vehicle models will probably not have a television receiver installed; yet the television bands occupy a significant portion of the radio spectrum. Testing and mitigating noise sources in such vehicles is not economically justified.

The vehicle manufacturer should define the countries in which the vehicle is to be marketed, then choose the applicable frequency bands and limits. Component test parameters can then be selected from this standard to support the chosen marketing plan.

The World Administrative Radio communications Conference (WARC) lower frequency limit in region 1 was reduced to 148,5 kHz in 1979. For vehicular purposes, tests at 150 kHz are considered adequate. For the purposes of this standard, test frequency ranges have been generalized to cover radio services in various parts of the world. Protection of radio reception at adjacent frequencies can be expected in most cases.

Annex E defines artificial networks used for the measurement of conducted disturbances and for tests on vehicles in charging mode.

Annex H defines a qualitative method of judging the degradation of radio communication in the presence of impulsive noise.

Annex I defines test methods for shielded power supply systems for high voltage networks in electric and hybrid vehicles.

Annex J defines methods for the validation of the ALSE and the reference ground plane used for component testing.

Annex K lists work being considered for future revisions.

2 Normative references

The following documents are referred to in the text in such a way that some or all of their content constitutes requirements of this document. For dated references, only the edition cited applies. For undated references, the latest edition of the referenced document (including any amendments) applies.

CISPR 16-1-1:2015, *Specification for radio disturbance and immunity measuring apparatus and methods – Part 1-1: Radio disturbance and immunity measuring apparatus – Measuring apparatus*

CISPR 16-1-2:2014, *Specification for radio disturbance and immunity measuring apparatus and methods – Part 1-2: Radio disturbance and immunity measuring apparatus – Coupling devices for conducted disturbance measurements*

CISPR 16-1-4:2010, *Specification for radio disturbance and immunity measuring apparatus and methods – Part 1-4: Radio disturbance and immunity measuring apparatus –Antennas and test sites for radiated disturbances measurements*
CISPR 16-1-4:2010/AMD1:2012

CISPR 16-2-1:2014, *Specification for radio disturbance and immunity measuring apparatus and methods – Part 2-1: Methods of measurement of disturbances and immunity – Conducted disturbance measurements*

ISO 7637-3:2016, *Road vehicles – Electrical disturbances from conduction and coupling – Part 3: Electrical transient transmission by capacitive and inductive coupling via lines other than supply lines*

ISO 11452-4:2011, *Road vehicles – Component test methods for electrical disturbances from narrowband radiated electromagnetic energy – Part 4: Harness excitation methods*

SAE ARP 958.1 Rev D: 2003-02, *Electromagnetic Interference Measurement Antennas; Standard Calibration Method*

3 Terms and definitions

For the purposes of this document, the following terms and definitions apply.

ISO and IEC maintain terminological databases for use in standardization at the following addresses:

- IEC Electropedia: available at http://www.electropedia.org/
- ISO Online browsing platform: available at http://www.iso.org/obp

3.1
absorber lined shielded enclosure
ALSE
shielded enclosure with radio frequency-absorbing material on its internal ceiling and walls

Note 1 to entry: This note applies to the French language only.

3.2
antenna factor
factor which is applied to the voltage measured at the input connector of the measuring instrument to give the field strength at the antenna

3.3
antenna matching unit
unit for matching the impedance of an antenna to that of the 50 Ω measuring instrument over the antenna measuring frequency range

3.4
artificial mains network
AMN
network that provides a defined impedance to the EUT at radio frequencies, couples the disturbance voltage to the measuring receiver and decouples the test circuit from the supply mains

Note 1 to entry: There are two basic types of AMN, the V-network (V-AMN) which couples the unsymmetrical voltages, and the delta-network which couples the symmetric and the asymmetric voltages separately. The terms line impedance stabilization network (LISN) and V-AMN are used.

Note 2 to entry: Network inserted in the power mains of the vehicle in charging mode or of a component (e.g. charger) which provides, in a given frequency range, a specified load impedance and which isolates the vehicle / component from the power mains in that frequency range.

Note 3 to entry: This note applies to the French language only.

3.5
artificial network
AN
network inserted in the supply lead or signal/load lead of an apparatus to be tested which provides, in a given frequency range, a specified load impedance for the measurement of disturbance voltages and which may isolate the apparatus from the supply or signal sources/loads in that frequency range

Note 1 to entry: Network inserted in the d.c power lines of the vehicle in charging mode which provides, in a given frequency range, a specified load impedance and which isolates the vehicle from the d.c power supply in that frequency range.

Note 2 to entry: This note applies to the French language only.

3.6
asymmetric artificial network
AAN
network used to measure (or inject) asymmetric (common mode) voltages on unshielded symmetric signal (e.g. telecommunication) lines while rejecting the symmetric (differential mode) signal

Note 1 to entry: This network is inserted in the communication/signal lines of the vehicle in charging mode or of a component (e.g. charger) to provide a specific load impedance and/or a decoupling (e.g. between telecommunication signal and power mains).

Note 2 to entry: This note applies to the French language only.

3.7
average detector
detector the output voltage of which is the average value of the envelope of an applied signal

Note 1 to entry: The average value shall be taken over a specified time interval.

[SOURCE: IEC 60050-161:1990, 161-04-26] [5][1]

3.8

3.8.1
bandwidth
<equipment> width of a frequency band over which a given characteristic of an equipment or transmission channel does not differ from its reference value by more than a specified amount or ratio

Note 1 to entry: The given characteristic may be, for example, the amplitude/frequency characteristic, the phase/frequency characteristic or the delay/frequency characteristic.

[SOURCE: IEC 60050-161:1990, 161-06-09] [5]

3.8.2
bandwidth
<emission or signal> width of the frequency band outside which the level of any spectral component does not exceed a specified percentage of a reference level

[SOURCE: IEC 60050-161:1990, 161-06-10] [5]

3.9
bonded
<ground connection and DC resistance> grounding connection with a DC resistance not exceeding 2,5 mΩ and that provides the lowest possible impedance (resistance and inductance) connection between two metallic parts (see 5.3 of CISPR 16-2-1:2014)

Note 1 to entry: A low current (≤100 mA) 4-wire milliohm meter is recommended for these measurements.

3.10
broadband emission
emission which has a *bandwidth* greater than that of a particular measuring apparatus or receiver

Note 1 to entry: An emission which has a pulse repetition rate (in Hz) less than the bandwidth of a particular measuring instrument can also be considered as a broadband emission.

---

1 Numbers in square brackets refer to the Bibliography.

3.11
class
performance level agreed upon by the purchaser and the supplier and documented in the test plan

3.12
compression point
input signal level at which the gain of the measuring system becomes non-linear such that the indicated output deviates from an ideal linear receiving system's output by a specified increment in dB

3.13
device
machine driven by an internal combustion engine which is not primarily intended to carry persons or goods

Note 1 to entry: **Devices** include, but are not limited to, chainsaws, irrigation pumps, snow blowers, air compressors, and landscaping equipment.

3.14
disturbance voltage
interference voltage (deprecated in this sense)
voltage produced between two points on two separate conductors by an *electromagnetic disturbance*, measured under specified conditions

[SOURCE: IEC 60050-161:1990, 161-04-01] [5]

3.15
high voltage
HV
operating voltage between 60 V to 1 000 V

Note 1 to entry: The term high voltage may be defined with a different voltage range in other standards.

3.16
high voltage artificial network
HV-AN
network inserted in the high voltage DC lead of apparatus to be tested which provides, in a given frequency range, a specified load impedance for the measurement of disturbance voltages and which may isolate the apparatus from the supply in that frequency range

Note 1 to entry: This note applies to the French language only.

3.17
low voltage
LV
operating DC voltage below 60 V, e.g. nominal voltages of 12 V, 24 V or 48 V

Note 1 to entry: The term low voltage may be defined with a different voltage range in other standards.

3.18
measurement time
effective, coherent time for a measurement result at a single frequency

– for the peak detector, the effective time to detect the maximum of the signal envelope,
– for the quasi-peak detector, the effective time to measure the maximum of the weighted envelope
– for the average detector, the effective time to average the signal envelope

3.19
narrowband emission
emission which has a *bandwidth* less than that of a particular measuring apparatus or receiver

Note 1 to entry: An emission which has a pulse repetition rate (in Hz) greater than the bandwidth of a particular measuring instrument can also be considered as a narrowband emission.

3.20
peak detector
detector, the output voltage of which is the peak value of an applied signal

[SOURCE: IEC 60050-161:1990, 161-04-24] [5]

3.21
quasi-peak detector
detector having specified *electrical time constants* which, when regularly repeated identical *pulses* are applied to it, delivers an output voltage which is a fraction of the peak value of the pulses, the fraction increasing towards unity as the pulse repetition rate is increased

[SOURCE: IEC 60050-161:1990, 161-04-21][5]

3.22
reference ground plane
flat conductive surface whose potential is used as a common reference

Note 1 to entry: For the purposes of this standard, the reference ground plane is defined as the top metallic surface of the test bench/table.

[SOURCE: IEC 60050-161:1990, 161-04-36, modified – Modification of the definition.] [5]

3.23
RF boundary
element of an EMC test setup that determines which part of the harness and/or peripherals are included in the RF environment and which part is excluded

Note 1 to entry: It may consist of, for example, ANs, filter feed-through pins, RF absorber coated wire, and/or RF shielding.

Note 2 to entry: This note applies to the French language only.

3.24
shielded enclosure
mesh or sheet metallic housing designed expressly for the purpose of electromagnetically separating the internal and the external environment

[SOURCE: IEC 60050-161:1990, 161-04-37, modified – The second preferred term "screened room" has been omitted.] [5]

3.25
validation reference ground plane
elevated reference ground plane with the dimensions of 2,5 m × 1 m which is used as the standard for the reference measurements/modelling per Annex J

Note 1 to entry: The validation reference ground plane size and grounding used during the reference measurements and/or modelling may be different than what a laboratory would use during EUT measurements.

4 Requirements common to vehicle and component/module emissions measurements

4.1 General test requirements

4.1.1 Categories of disturbance sources (as applied in the test plan)

Electromagnetic disturbance sources can be divided into two main types:

- narrowband sources (examples of narrowband disturbance sources are vehicle electronic components which include clocks, oscillators, digital logic from microprocessors and displays);
- broadband sources (examples of broadband disturbance sources are electrical motors and ignition systems).

NOTE 1 While most vehicle or electrical/electronic components are a source of both narrowband and broadband disturbances, some can be a source of only one type of disturbance.

NOTE 2 Broadband sources can be classified in short-duration broadband (examples are washer pump, door mirror, electrical windows) and long-duration broadband (examples are front wiper motor, heater blower, engine cooling)

For the purposes of this standard, categorization of the disturbance type is used only in simplifying the testing demands by potentially reducing the number of detectors that shall be used (i.e. eliminating the average detector if the device is known to be broadband-type of source, such as a DC brush commutated motor). Otherwise, this standard requires that sources comply with limits based upon both types of measurement detectors and not the type of disturbance.

4.1.2 Test plan

A test plan shall be established for each item to be tested. The test plan shall specify the

- frequency range to be tested,
- emissions limits,
- antenna types and locations,
- test report requirements,
- supply voltage and other relevant parameters.

The test plan shall define for each frequency band whether the conformance can be obtained with average and peak limits or with average and quasi-peak limits.

4.1.3 Determination of conformance of equipment under test (EUT) with limits

In all cases the EUT shall conform to the average limit.

The EUT shall also conform to either peak or quasi-peaks limits as follows.

- For frequencies where both peak and quasi-peak limits are defined, the EUT shall conform to either the peak or the quasi-peak limits (as defined in the test plan).
- For frequencies where only peak limits are defined, the EUT shall conform to the peak limit.

The general procedure applicable for all frequency bands is described in Figure 1.

The limits given in this standard take uncertainties into account.

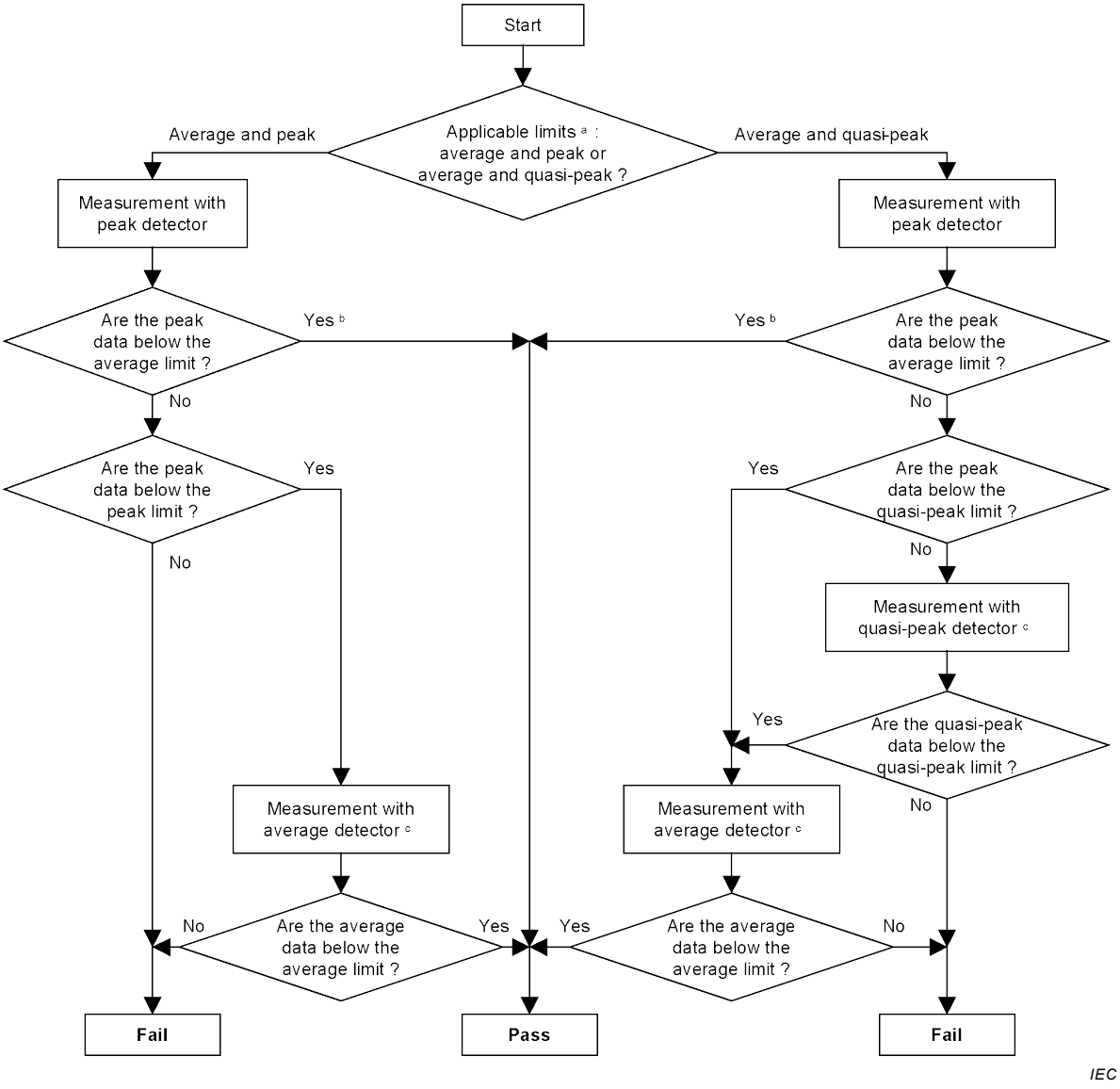

[a] The conformance can normally be obtained by compliance to both average and peak limits or both average and quasi-peak limits, unless the test plan defines that conformance can be obtained by compliance to the single appropriate limit *(depending on the case, peak, or average, or quasi-peak)*.

[b] Because measurements with a peak detector are always higher than or equal to measurements with an average detector and the applicable peak limit is always higher than or equal to the applicable average limit, this single detector measurement can lead to a simplified and quicker conformance process.

[c] This flow-chart is applicable for each individual frequency, e.g. only frequencies that are above the applicable limit need to be remeasured with average or quasi-peak detector.

Figure 1 – Method of determination of conformance for all frequency bands

4.1.4 Operating conditions

Different operating conditions of the EUT can influence emission measurement results. When performing component/module tests, the EUT shall be made to operate under typical loading and other conditions as in the vehicle such that the maximum emission state occurs. The operating conditions shall be specified in the test plan.

To ensure correct operation of components/modules during test, a peripheral interface unit shall be used which simulates the vehicle installation. Depending on the intended operating modes, all significant sensor and actuator leads of the EUT shall be connected to a peripheral

interface unit. The peripheral interface unit shall be capable of controlling the EUT in accordance with the test plan.

The peripheral interface unit may be located internally or externally to the shielded enclosure. If located in the shielded enclosure, the disturbance levels generated by the peripheral interface unit shall be at least 6 dB below the test limits specified in the test plan.

4.1.5 Test report

The report shall contain the information agreed upon by the customer and the supplier, e.g.

- sample identification,
- date and time of test,
- bandwidth,
- step size,
- required test limit,
- ambient data and test data.

4.2 Shielded enclosure

The ambient electromagnetic noise levels shall be at least 6 dB below the limits specified in the test plan for each test to be performed. The shielding effectiveness of the shielded enclosure shall be sufficient to assure that the required ambient electromagnetic noise level requirement is met.

NOTE Although there will be reflected energy from the interior surfaces of the shielded enclosure, this is of minimal concern for the measurement of conducted disturbances because of the direct coupling of the measuring instrument to the leads of the EUT. The shielded enclosure can be as simple as a suitably grounded bench-top screened cage.

4.3 Absorber-lined shielded enclosure (ALSE)

4.3.1 General

For radiated emission measurements, however, the reflected energy can cause errors of as much as 20 dB. Therefore, it is necessary to apply RF absorber material to the walls and ceiling of a shielded enclosure that is to be used for radiated emission measurements. No absorber shall be placed on the floor for vehicle tests. For component testing, no absorber shall be placed on the floor, however, flat ferrite tiles with a maximum thickness of 25 mm may be utilised on the floor for component level testing if the chamber performance in this configuration meets the requirements of Annex J.

The following ALSE requirements shall also be met for performing radiated RF emissions measurements.

4.3.2 Size

For radiated emissions tests, the shielded enclosure shall be of sufficient size to ensure that neither the vehicle/EUT nor the test antenna shall be closer than 1 m from the walls or ceiling, or to the nearest surface of the absorber material used thereon.

4.3.3 Objects in ALSE

For radiated emissions measurements in particular, the ALSE shall be cleared of all items not pertinent to the tests. This is required in order to reduce any effect they may have on the measurement. Included are unnecessary equipment, cable racks, storage cabinets, desks, chairs, etc. Personnel not actively involved in the test shall be excluded from the ALSE.

4.3.4 ALSE performance validation

4.3.4.1 Vehicle ALSE

Performance of the absorption material shall be greater than or equal to 6 dB in the 70 MHz to 2 500 MHz frequency range.

NOTE A test method is described in IEEE STD 1128-1998 [4].

4.3.4.2 Component ALSE

Performance of the absorption material shall be greater than or equal to 6 dB in the 70 MHz to 2 500 MHz frequency range.

NOTE 1 A test method is described in IEEE STD 1128-1998 [4].”

NOTE 2 Additionally, the ALSE performance validation procedure described in Annex J may be used to evaluate the performance of the shielded enclosure as configured for 6.5 component radiated emissions testing. This performance verification procedure will evaluate the influences of the chamber, absorber, ground plane, ground plane grounding, and any other possible cause for measurement variation.

4.4 Measuring instrument

4.4.1 General

The measuring instrument shall comply with the requirements of CISPR 16-1-1. Either manual or automatic frequency scanning may be used.

For the limits given in this standard, the appropriate average detector is the linear detector with meter time constants defined in CISPR 16-1-1.

NOTE 1 Spectrum analysers and scanning receivers are particularly useful for disturbance measurements. The peak detection mode of spectrum analysers and scanning receivers provides a display indication which is never less than the quasi-peak indication for the same bandwidth. It can be convenient to measure emissions using peak detection because of the faster scan possible than with quasi-peak detection.

NOTE 2 A preamplifier can be used between the antenna and measuring instrument in order to achieve the 6 dB ambient noise requirements (see 4.2). If a preamplifier is used to achieve the 6 dB ambient noise requirement, the laboratory establishes a procedure to avoid overload of the preamplifier, such as using a step attenuator.

4.4.2 Spectrum analyser parameters

The scan rate of the spectrum analyser shall be adjusted for the CISPR frequency band and detection mode used.

Spectrum analysers may be used for performing compliance measurements to this standard providing the precautions cited in CISPR 16-1-1 on the use of spectrum analysers are adhered to and that the broadband emissions from the product being tested have a repetition frequency greater than 20 Hz.

The minimum scan time in Table 1 is applicable only for the measurement of emissions where the pulse repetition interval of the signal is shorter than the minimum observation time at each frequency based on a step size equal to half of the resolution bandwidth B_{res}. For the measurement of signals with a pulse repetition interval longer than the minimum observation time, and for the measurement of intermittent signals the minimum scan time has to be increased.

If the pulse repetition interval of the signal is known the scan shall be performed with a scan time that allows an observation time at each frequency that is longer than the reciprocal of the pulse repetition frequency of the signal.

As alternative, multiple faster scans with the use of a maximum hold function may be used if the total scanning time is equal to, or greater than, the time that would have been spent using

the minimum scan time defined in Table 1. The following equation can be used to calculate the minimum scan time for multiple scans.

$$T_{\mathrm{s,min}} = 2 \times \frac{\Delta f}{B_{\mathrm{res}}} \tag{1}$$

where

$T_{\mathrm{s,min}}$ is the minimum scan time for multiple scans,

Δf is the frequency span,

B_{res} is the resolution bandwidth (RBW).

For further guidance on the measurement of the duration of disturbance and the determination of the minimum scan time, see CISPR 16-2-1 and CISPR 16-2-3 [7].

Table 1 – Spectrum analyser parameters

Service / Band	Frequency MHz	Peak detection		Quasi-peak detection		Average detection	
		RBW at −3 dB	Min. scan time	RBW at −6 dB	Min. scan time	RBW at −3 dB	Min. scan time
BROADCAST							
LW	0,15 to 0,30	9 kHz or 10 kHz	10 s / MHz	9 kHz	200 s / MHz	9 kHz or 10 kHz	10 s / MHz
MW	0,53 to 1,8						
SW	5,9 to 6,2						
FM	76 to 108	100 kHz or 120 kHz	100 ms / MHz	120 kHz	20 s / MHz	100 kHz or 120 kHz	100 ms / MHz
TV Band I	41 to 88						
TV Band III	174 to 230						
DAB III	171 to 245						
TV Band IV/V	468 to 944						
DTTV	470 to 770	100 kHz or 120 kHz	100 ms / MHz	Does not apply	Does not apply	100 kHz or 120 kHz	100 ms / MHz
DAB L band	1 447 to 1 494						
SDARS	2 320 to 2 345						
MOBILE SERVICES							
CB	26 to 28	9 kHz or 10 kHz	10 s / MHz	9 kHz	200 s / MHz	9 kHz or 10 kHz	10 s / MHz
VHF	30 to 54	100 kHz or 120 kHz	100 ms / MHz	120 kHz	20 s / MHz	100 kHz or 120 kHz	100 ms / MHz
VHF	68 to 87						
VHF	142 to175						
Analogue UHF	380 to 512						
RKE	300 to 330						
RKE	420 to 450						
Analogue UHF	820 to 960						
GSM 800	860 to 895						
EGSM/GSM 900	925 to 960						
GPS L1 civil	1 567 to 1 583	Does not apply	Does not apply	Does not apply	Does not apply	9 kHz or 10 kHz	1 s / MHz
GLONASS L1	1 591 to 1 613						
GSM 1800 (PCN)	1 803 to 1 882	100 kHz or 120 kHz	100 ms / MHz	Does not apply	Does not apply	100 kHz or 120 kHz	100 ms / MHz
GSM 1900	1 850 to 1 990						
3G / IMT 2000	1 900 to 1 992						
3G / IMT 2000	2 010 to 2 025						
3G / IMT 2000	2 108 to 2 172						
Bluetooth/ 802.11	2 400 to 2 500						

When a spectrum analyser is used for measurements, the video bandwidth shall be at least three times the resolution bandwidth (RBW).

4.4.3 Scanning receiver parameters

The dwell time of the scanning receiver shall be adjusted for the CISPR frequency band and detection mode used. The minimum measurement time, maximum step size and recommended bandwidth (BW) are listed in Table 2.

The minimum measurement time in Table 2 is applicable only for the measurement of emissions where the pulse repetition interval of the signal is shorter than the minimum measurement time in Table 2. For the measurement of signals with a pulse repetition interval longer than the minimum measurement time in Table 2 and for the measurement if intermittent signals the minimum measurement time has to be increased.

If the pulse repetition interval of the signal is known the scan shall be performed with a measurement time that is longer than the reciprocal of the pulse repetition frequency of the signal.

For further guidance on the measurement of the duration of disturbance and the determination of the minimum measurement time see CISPR 16-2-1 and CISPR 16-2-3 [7].

Table 2 – Scanning receiver parameters

Service / Band	Frequency MHz	Peak detection			Quasi-peak detection			Average detection		
		BW at −6 dB	Max. step size	Min. measure-ment time	BW at −6 dB	Max. step size	Min. measure-ment time	BW at −6 dB	Max. Step size	Min. mea-sure-ment time
BROADCAST										
LW	0,15 to 0,30	9 kHz	5 kHz	50 ms	9 kHz	5 kHz	1 s	9 kHz	5 kHz	50 ms
MW	0,53 to 1,8									
SW	5,9 to 6,2									
FM	76 to 108	120 kHz	50 kHz	5 ms	120 kHz	50 kHz	1 s	120 kHz	50 kHz	5 ms
TV Band I	41 to 88									
TV Band III	174 to 230									
DAB III	171 to 245									
TV Band IV/V	468 to 944									
DTT	470 to 770	120 kHz	50 kHz	5 ms	Does not apply	Does not apply	Does not apply	120 kHz	50 kHz	5 ms
DAB L band	1 447 to 1 494									
SDARS	2 320 to 2 345									
MOBILE SERVICES										
CB	26 to 28	9 kHz	5 kHz	50 ms	9 kHz	5 kHz	1 s	9 kHz	5 kHz	50 ms
VHF	30 to 54	120 kHz	50 kHz	5 ms	120 kHz	50 kHz	1 s	120 kHz	50 kHz	5 ms
VHF	68 to 87									
VHF	142 to 175									
Analogue UHF	380 to 512									
RKE	300 to 330									
RKE	420 to 450									
Analogue UHF	820 to 960									
GSM 800	860 to 895									
EGSM/GSM 900	925 to 960									
GPS L1 civil	1 567 to 1 583	Does not apply	Does not apply	Does not apply	Does not apply	Does not apply	Does not apply	9 kHz	5 kHz	5 ms
GLONASS L1	1 591 to 1 613									
GSM 1800 (PCN)	1 803 to 1 882	120 kHz	50 kHz	5 ms	Does not apply	Does not apply	Does not apply	120 kHz	50 kHz	5 ms
GSM 1900	1 850 to 1 990									
3G / IMT 2000	1 900 to 1 992									
3G / IMT 2000	2 010 to 2 025									
3G / IMT 2000	2 108 to 2 172									
Bluetooth/ 802.11	2 400 to 2 500									

NOTE For emissions generated by brush commutator motors without an electronic control unit, the maximum step size can be increased up to 5 times the bandwidth.

4.5 Power supply

The power supply shall have adequate regulation to maintain the supply voltage U_s within the ranges specified:

Vehicle tests: ignition on, engine off

The vehicle battery voltage shall be recorded before and after the measurement with ignition off and battery disconnected from the vehicle electrical network. The values shall be within the following values:

$$U_s = \left(12 \begin{matrix}+2\\-1\end{matrix}\right) \text{ V for systems with 12 V nominal supply voltage}$$

$$U_s = \left(24 \begin{matrix}+4\\-2\end{matrix}\right) \text{ V for systems with 24 V nominal supply voltage}$$

Vehicle tests: engine running

The vehicle battery voltage shall be recorded before and after the measurement with engine running in idle mode and battery connected to the vehicle electrical network. The values shall be within the following values:

$$U_s = \left(13 \begin{matrix}+3\\-0\end{matrix}\right) \text{ V for systems with 12 V nominal supply voltage}$$

$$U_s = \left(26 \begin{matrix}+6\\-0\end{matrix}\right) \text{ V for systems with 24 V nominal supply voltage}$$

NOTE Most of the vehicle tests will be performed without the engine running, but with the ignition switched on, therefore care is taken to ensure that the battery is sufficiently well charged. A permanent recording of the battery voltage can be installed during the measurements as a complementary information.

Vehicle tests: charging mode

The DC power supply voltage during the test shall be nominal ±10 %.

The AC power supply voltage during the test shall be nominal −15 % / +10 %. The rated value of the frequency shall be nominal ±1 %.

$$U_s = \left(14 \begin{matrix}+1\\-1\end{matrix}\right) \text{ V for systems with 12 V nominal supply voltage}$$

$$U_s = \left(24 \begin{matrix}+4\\-2\end{matrix}\right) \text{ V for systems with 24 V nominal supply voltage}$$

Component/module tests:

The DC power supply voltage during the test shall be nominal ±10 %.

The AC power supply voltage during the test shall be nominal −15 % / +10 %. The rated value of the frequency shall be nominal ±1 %.

Unless otherwise stated in the test plan the values below shall be used.

$$U_s = \left(13^{+1}_{-1}\right) \text{ V for systems with 12 V nominal supply voltage}$$

$$U_s = \left(26^{+2}_{-2}\right) \text{ V for systems with 24 V nominal supply voltage}$$

$$U_s = \left(48^{+4}_{-4}\right) \text{ V for systems with 48 V nominal supply voltage}$$

The power supply shall also be adequately filtered such that the RF noise produced by the power supply is at least 6 dB lower than the limits specified in the test plan.

When specified in the test plan, a vehicle battery shall be connected in parallel with the power supply.

5 Measurement of emissions received by an antenna on the same vehicle

5.1 Antenna measuring system

5.1.1 Type of antenna

An antenna of the type to be supplied with the vehicle shall be used as the measurement antenna for the bands for which it is designed to be used for radio reception.

If no antenna is to be furnished with the vehicle (as is often the case with a mobile radio system) the antenna types in Table 3 shall be used for the test. The antenna type and location shall be included in the test plan.

If an active antenna is used, the noise floor of the measured signal at the radio antenna connector may increase (see also the note in 5.4).

Table 3 – Antenna types

Frequency MHz	**Antenna type**
0,15 to 6,2	1 m monopole
26 to 54	Loaded quarter-wave monopole
68 to 1 000	Quarter-wave monopole
1 000 to 2 500	As recommended by the vehicle manufacturer

5.1.2 Measuring system requirements

5.1.2.1 Broadcast bands

5.1.2.1.1 General

For each band, the measurement shall be made with instrumentation which has the following specified characteristics.

5.1.2.1.2 AM broadcast

Long wave (0,15 MHz to 0,3 MHz)

Medium wave (0,53 MHz to 1,8 MHz)

Short wave (5,9 MHz to 6,2 MHz)

The measuring system consisting of an antenna element, antenna matching unit, coaxial cable(s) and preamplifier, if used, shall have the following characteristics:

– noise floor of the measurement system shall be at least 6 dB lower than the applicable limits.

Antenna matching unit

– The input impedance shall have a resistance of at least 100 kΩ in parallel with a maximum capacitance of 10 pF.
– Output impedance: 50 Ω resistive.
– Gain: The gain (or attenuation) shall be known with an accuracy of ±0,5 dB. The gain shall remain within a 6 dB envelope for each frequency band as shown in Figure 2. Verification shall be performed in accordance with Annex B.

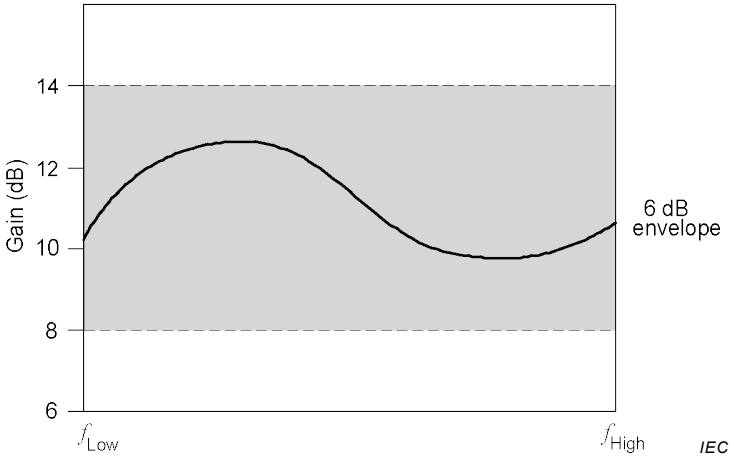

Figure 2 – Example of gain curve

– Compression point: The 1 dB compression point shall occur at a sine wave voltage level (generator output level) greater than 60 dB(μV). Verification shall be performed in accordance with Annex B.

5.1.2.1.3 FM broadcast (76 MHz to 108 MHz) and Digital audio and TV broadcast

Measurements shall be taken with a measuring instrument which has an input impedance of 50 Ω. If the voltage standing wave ratio (VSWR) of the antenna is greater than 2:1 an input matching network shall be used. Appropriate correction shall be made for any attenuation/gain of the matching unit.

5.1.2.2 Mobile services (26 MHz to 2 500 MHz)

Measurements shall be taken with a measuring instrument which has an input impedance of 50 Ω. If the voltage standing wave ratio (VSWR) of the antenna is greater than 2:1 an input matching network shall be used. Appropriate correction shall be made for any attenuation/gain of the matching unit.

5.2 Method of measurement

The disturbance voltage shall be measured at the receiver end of the antenna coaxial cable using the ground contact of the connector as reference. The antenna connector shall be grounded to the housing of the on-board radio. The radio housing shall be grounded to the vehicle body using the production harness. A coaxial bulkhead connector shall be used for connection to the measuring instrument outside the shielded room. In the case of an active vehicle antenna, which is fed by the radio via the antenna cable (phantom network), a decoupling network similar to that used in the radio shall be installed at the antenna connector to feed the active antenna from the vehicle supply voltage.

When making measurements in the AM broadcast bands (LW, MW, SW), the vehicle/matching unit ground and ground of the ALSE shall be electrically isolated from each other by means such as an isolation transformer, sheath-current suppressor, battery-powered measurement instrumentation, fibre optics, etc. Appropriate correction shall be made for the insertion loss of any isolation network. (See Annex C for an example of a sheath-current suppressor.)

The use of a high-quality coaxial cable, e.g. double-shielded cable for connection to the measuring instrument is recommended as well as the use of ferrite rings on the cable for suppression of surface currents.

Some vehicles may allow a receiver to be mounted in several locations (e.g. under the instrument panel, under the seat, etc.). In these cases a test shall be carried out as specified in the test plan for each receiver location.

The test setup is described in Figure 3.

Dimensions in millimetres – not to scale

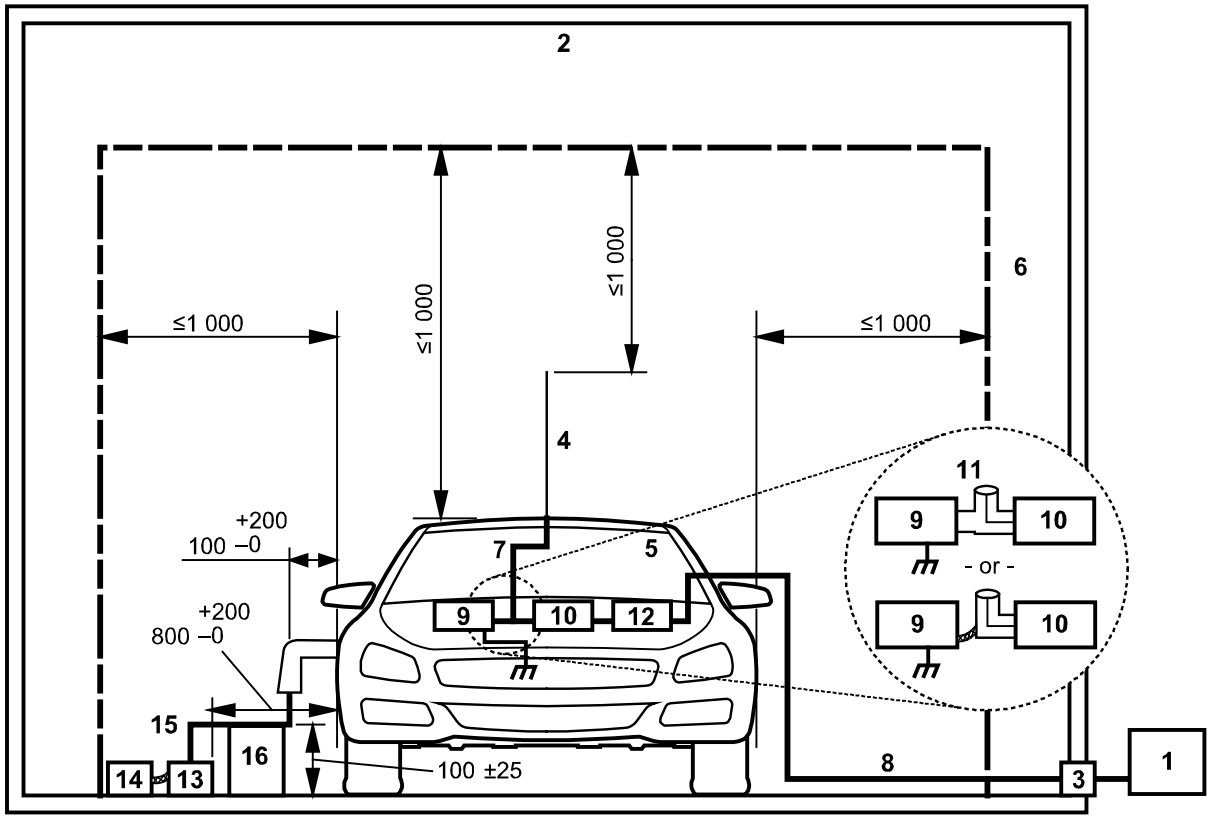

Key

1 Measuring instrument
2 ALSE
3 Bulkhead connector
4 Antenna (see 5.1)
5 Vehicle
6 Typical absorber material
7 Antenna coaxial cable
8 High-quality coaxial cable e.g. double-shielded (50 Ω)
9 Housing of on-board radio
10 Impedance matching unit (when required)
11 Modified coaxial "T" connector
12 AM broadcast band ground isolation network (when required)
13 Artificial mains network (only for charging mode configuration)
14 Power mains (only for charging mode configuration)
15 Charging cable (only for charging mode configuration)
16 Insulating support (only for charging mode configuration)

Figure 3 – Vehicle-radiated emissions – Example for test layout (end view with monopole antenna)

5.3 Test setup for vehicle in charging mode

5.3.1 General

The various configurations (AC or DC, with or without communication) are considered in this clause.

5.3.2 AC power charging without communication

5.3.2.1 Power mains

The power mains socket can be placed anywhere in the test location with the following conditions.

- It shall be placed on the reference ground plane.
- The length of the harness between the power mains socket and the AMN(s) shall be kept as short as possible.
- The harness shall be placed on the reference ground plane.

5.3.2.2 Artificial mains network

Power mains shall be applied to the vehicle through 50 μH/50 Ω AMN(s) (see Annex E).

The AMN(s) shall be mounted directly on the reference ground plane. The case of the AMN(s) shall be bonded to the reference ground plane. The DC resistance between the ground of the AMN measurement port and the ground plane shall not exceed 2,5 mΩ.

The measuring port of each AMN shall be terminated with a 50 Ω load.

For vehicles with plug located front/rear of the vehicle, the AMN shall be placed on one side of the vehicle and perpendicularly to the vehicle power charging plug and shall be aligned with the vehicle charging cable. For vehicles with plug located on vehicle side, the AMN shall be placed on one side of the vehicle and aligned with the vehicle power charging plug and shall be aligned with the vehicle charging cable.

5.3.2.3 Power charging cable

The power charging cable shall be placed in a straight line between the AMN(s) and the vehicle charging plug and shall be routed perpendicularly to the vehicle longitudinal axis as shown in Figure 4 and Figure 5. The projected cable length shall be $800\ ^{+200}_{0}$ mm.

If the length of the cable is longer than 1 m, the extraneous length shall be “Z-folded” in less than 0,5 m width. If it is impractical to do so because of cable bulk or stiffness, or because the testing is being done at a user installation, the disposition of the excess cable shall be precisely noted in the test report.The charging cable at vehicle side shall hang vertically at a distance of $100\ ^{+200}_{0}$ mm from the vehicle body.

The whole cable shall be placed on a non-conductive, low relative permittivity (dielectric-constant) material ($\varepsilon_r \leq 1{,}4$), at (100 ± 25) mm above the reference ground plane.

5.3.2.4 Measuring system

The measuring system (receiver, impedance matching unit, cable…) shall be placed as defined in Figure 3.

Examples of test setups are shown in Figure 4 and Figure 5.

Dimensions in millimetres

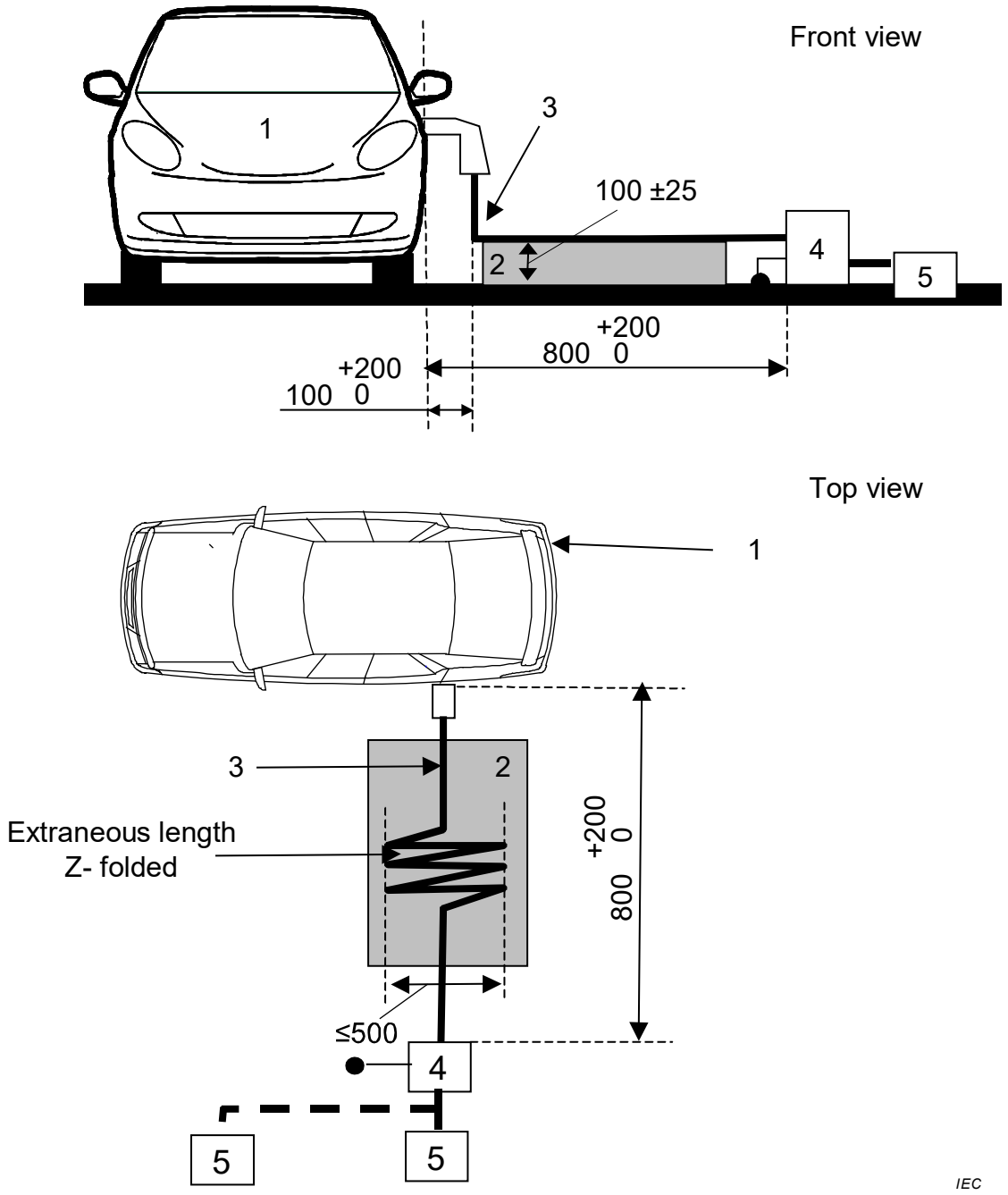

Key

1 Vehicle under test

2 Insulating support

3 Charging cable

4 Artificial mains network(s) grounded

5 Power mains socket (see 5.3.2.1, alternative positions shown in the figure.)

Figure 4 – Example of test setup for vehicle with plug located on vehicle side (AC powered without communication)

Dimensions in millimetres

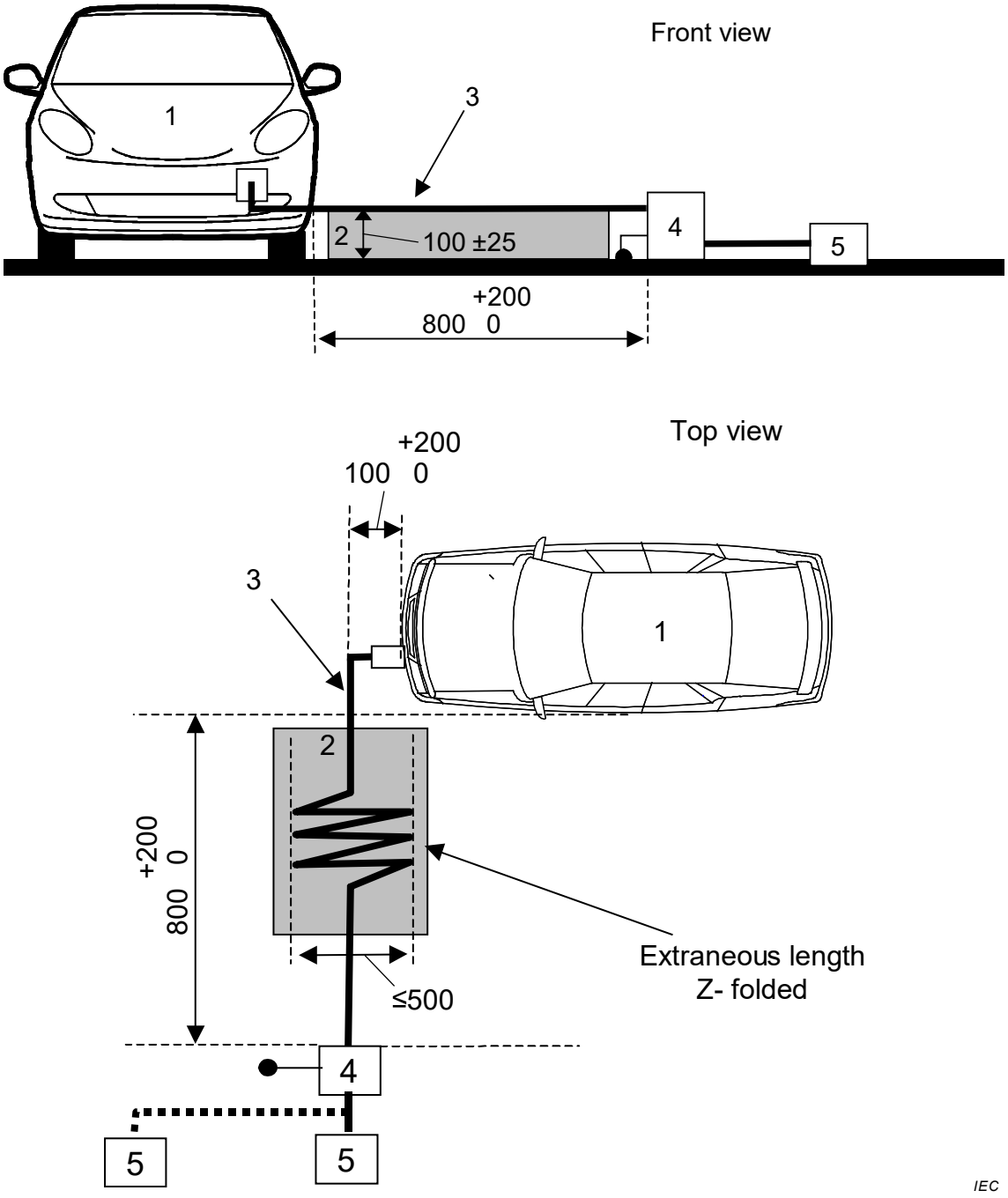

Key

1 Vehicle under test

2 Insulating support

3 Charging cable

4 Artificial mains network(s) grounded

5 Power mains socket (see 5.3.2.1, alternative positions shown in the figure)

Figure 5 – Example of test setup for vehicle with plug located front / rear of vehicle (AC powered without communication)

5.3.3 AC or DC power charging with communication line(s) or with signal line(s)

5.3.3.1 General

This configuration concerns charging mode for AC power and for DC power using communications or signal lines.

NOTE In some cases the lines used for communication between vehicle and charging station cannot be considered as “communication line” (as defined in CISPR 22 [2]) but rather as signal lines.

5.3.3.2 Charging station / power mains

The charging station may be placed either in the test location or outside the test location.

NOTE 1 If communications between the vehicle and the charging station can be simulated, the charging station can be replaced by the supply from power mains.

In both cases duplicated power mains and communication or signal lines socket(s) shall be placed in the test location with the following conditions.

– It shall be placed on the reference ground plane.
– The length of the harness between the power mains / communication or signal lines socket and the AMN(s) / AN(s) / AAN(s) shall be kept as short as possible.
– The harness between the power mains / communication or signal lines socket and the AMN(s) / AN(s) / AAN(s) shall be placed on the reference ground plane.

NOTE 2 The power mains and communication or signal lines socket(s) are filtered.

If the charging station is placed inside the test location then the harness between charging station and the power mains / communication or signal lines socket shall be placed with the following conditions.

– The harness at charging station side shall hang vertically down to the reference ground plane.
– The extraneous length shall be placed as close as possible to the reference ground plane and “Z-folded” if necessary.

5.3.3.3 Artificial mains networks / artificial networks

The AC mains shall be applied to the vehicle through 50 μH/50 Ω AMN(s) (see Annex E).

The DC power mains shall be applied to the vehicle through 5 μH/50 Ω High Voltage Artificial Networks (HV-AN(s))”. (see Annex E).

The AMN(s) / HV-AN(s) shall be mounted directly on the reference ground plane. The cases of the AMN(s) / HV-AN(s) shall be bonded to the reference ground plane. The DC resistance between the ground of the AMN / HV-AN measurement port and the ground plane shall not exceed 2,5 mΩ.

The measuring port of each AMN / HV-AN shall be terminated with a 50 Ω load.

The AMN / HV-AN shall be placed in front, aligned and on the same side of the vehicle power charging plug. For vehicles with plug located on the vehicle side, the AMN/AN shall be placed on one side of the vehicle and aligned with the vehicle power charging plug and shall be aligned with the vehicle charging cable.

5.3.3.4 Asymmetric artificial network

Communication lines shall be applied to the vehicle through AAN(s) (see Annex E).

NOTE Signal lines can be applied to the vehicle through AAN(s) (see Annex E).

The AAN(s) shall be mounted directly on the reference ground plane. The case of the AAN(s) shall be bonded to the reference ground plane.

The measuring port of each AAN shall be terminated with a 50 Ω load.

For vehicles with plug located front/rear of the vehicle, the AAN shall be placed on one side of the vehicle and perpendicularly to the vehicle power charging plug and shall be aligned with the vehicle charging cable. For vehicles with plug located on the vehicle side, the AAN shall be placed on one side of the vehicle and aligned with the vehicle power charging plug and shall be aligned with the vehicle charging cable.

5.3.3.5 Power charging / communication or signal cable

The power charging/communication or signal cable shall be placed in a straight line between the AMN(s) / HV-AN(s) / AAN(s) and the vehicle charging plug and shall be routed perpendicularly to the vehicle longitudinal axis as shown in Figure 6 and Figure 7. The projected cable length shall be $0{,}8\ ^{+0{,}2}_{0}$ m.

If the length of the cable is longer than 1 m, the extraneous length shall be “Z-folded” in less than 0,5 m width. If it is impractical to do so because of cable bulk or stiffness, or because the testing is being done at a user installation, the disposition of the excess cable shall be precisely noted in the test report.

The charging / communication or signal cable at vehicle side shall hang vertically at a distance of $100\ ^{+200}_{0}$ mm from the vehicle body.

The whole cable shall be placed on a non-conductive, low relative permittivity (dielectric-constant) material ($\varepsilon_r \leq 1{,}4$), at (100 ± 25) mm above the reference ground plane.

5.3.3.6 Measuring system

The measuring system (receiver, impedance matching unit, cable, and so on) shall be placed as defined in Figure 3.

Examples of test setups are shown in Figure 6 and Figure 7.

Dimensions in millimetres

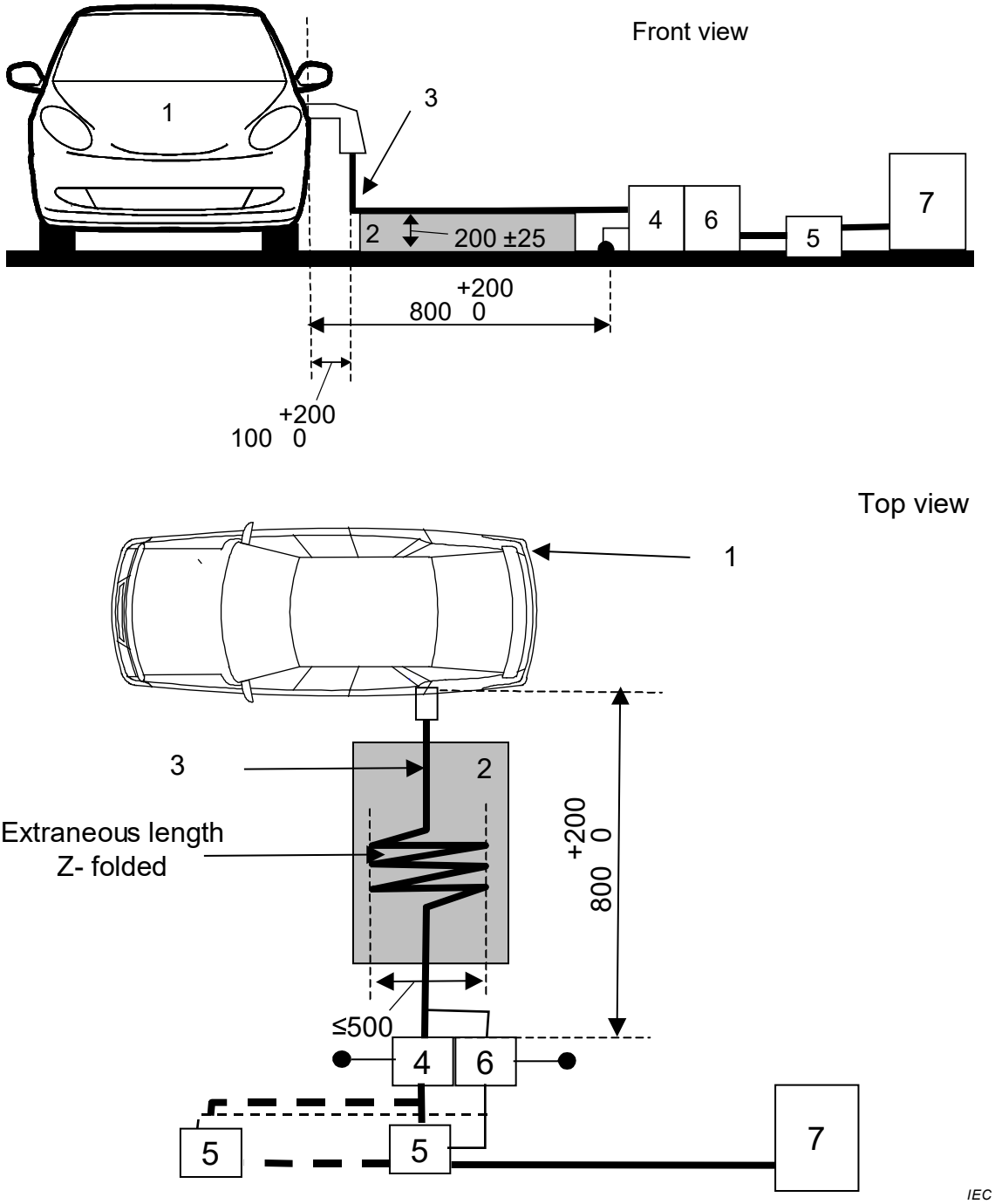

Key

1 Vehicle under test

2 Insulating support

3 Charging / communication or signal cable

4 AC-AMN(s) or DC HV-AN(s) grounded

5 Power mains socket (alternative positions shown in the figure)

6 Asymmetric artificial network(s) grounded

7 Charging station

Figure 6 – Example of test setup for vehicle with plug located on vehicle side (AC or DC powered with communication)

Dimensions in millimetres

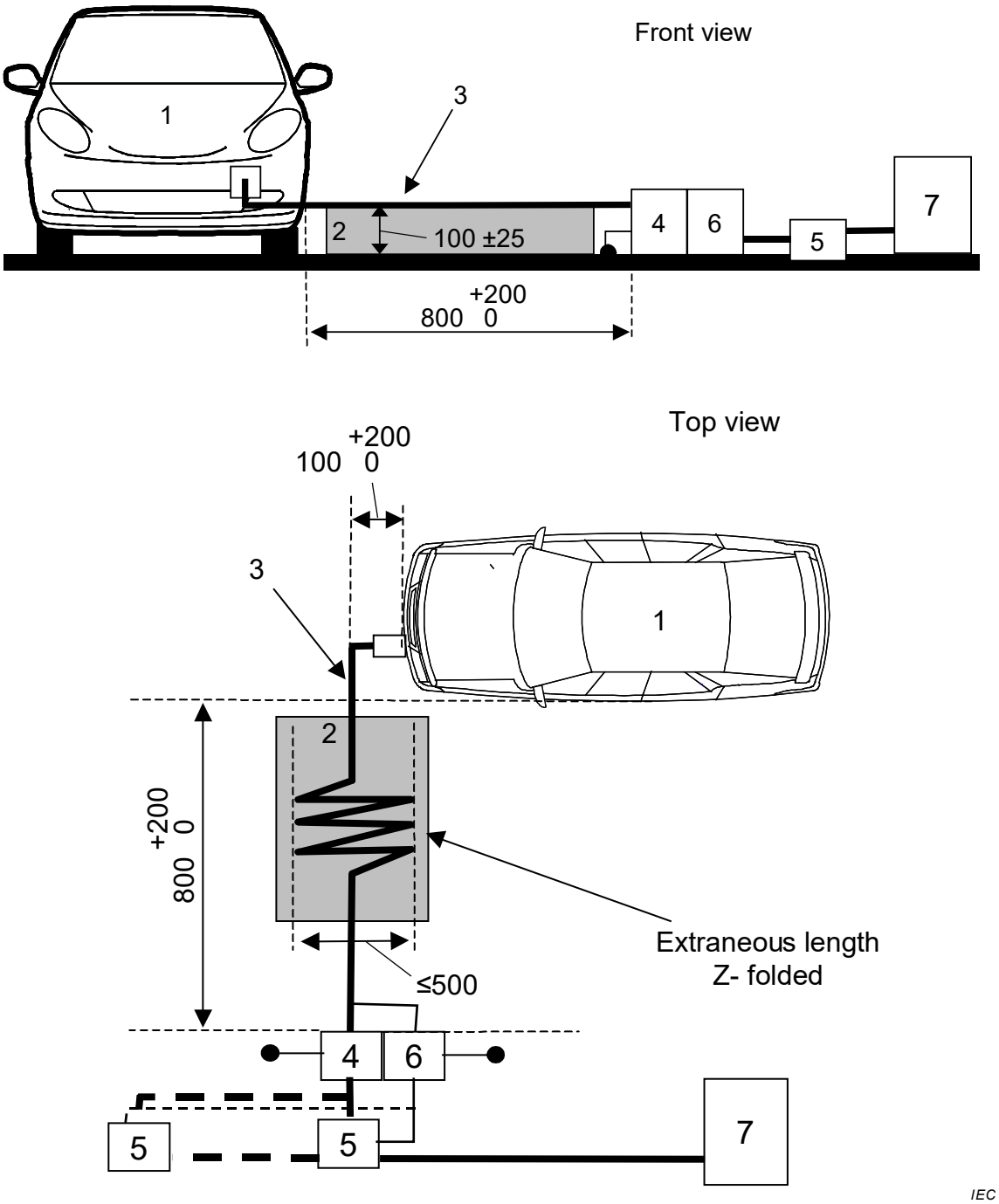

Key

1 Vehicle under test

2 Insulating support

3 Charging / communication or signal cable

4 AC AMN(s) or DC HV-AN(s) grounded

5 Power mains socket (alternative positions shown in the figure)

6 Asymmetric artificial network(s) grounded

7 Charging station

Figure 7 – Example of test setup for vehicle with plug located front /rear of vehicle (AC or DC powered with communication)

5.4 Examples of limits for vehicle radiated disturbances

It is recommended for acceptable radio reception in a vehicle using typical radio receivers, that the disturbance voltage at the end of the antenna cable should not exceed the values shown in Table 4. Where different receivers are used or different coupling models for the propagation of disturbances are valid, the limits may be changed and detailed in the vehicle manufacturer's own specification.

Table 4 – Example for limits of disturbance – Complete vehicle

Service / Band [a]	Frequency MHz	Terminal disturbance voltage at receiver antenna terminal in dB (µV)		
		Peak	Quasi-peak	Average
BROADCAST				
LW [b]	0,15 to 0,30	26	13	6
MW [b]	0,53 to 1,8	20	7	0
SW [b]	5,9 to 6,2	20	7	0
FM [b]	76 to 108	26	13	6
TV Band I [c]	41 to 88	16	–	6
TV Band III [c]	174 to 230	16	–	6
DAB III	171 to 245	10	–	0
TV Band IV/V [c]	468 to 944	16	–	6
DTTV	470 to 770	20 [d]	–	10 [d]
DAB L band	1 447 to 1 494	10	–	0
SDARS	2 320 to 2 345	16	–	6
MOBILE SERVICES				
CB [b]	26 to 28	20	7	0
VHF [b]	30 to 54	20	7	0
VHF [b]	68 to 87	20	7	0
VHF [b]	142 to 175	20	7	0
Analogue UHF [b]	380 to 512	20	7	0
RKE [f]	300 to 330	20	–	6
RKE [f]	420 to 450	20	–	6
Analogue UHF [b]	820 to 960	20	7	0
GSM 800	860 to 895	26	–	6
EGSM/GSM 900	925 to 960	26	–	6
GPS L1 civil [e,g]	1 567 to 1 583	–	–	0
GLONASS L1 [e,h]	1 591 to 1 616	–	–	0
GSM 1800 (PCN)	1 803 to 1 882	26	–	6
GSM 1900	1 850 to 1 990	26	–	6
3G / IMT 2000	1 900 to 1 992	26	–	6
3G / IMT 2000	2 010 to 2 025	26	–	6
3G / IMT 2000	2 108 to 2 172	26	–	6
Bluetooth/802.11	2 400 to 2 500	26	–	6

a	LW: Long wave, MW: Medium wave, SW: Short wave (amplitude modulation, AM) VHF: Very high frequency, UHF: Ultra high frequency (frequency modulation, FM) DAB: Digital audio broadcasting, TV: Television, DTTV: Digital terrestrial television RKE: Remote keyless entry, GPS: Global positioning system, GSM: Global system mobile 3G: Third generation
b	In this analogue service the peak and quasi-peak limits can be relaxed by 6 dB for short duration disturbances (e.g. short duration PK (or QPK) limit = PK (or QPK) limit + 6 dB).
c	Analogue TV only.
d	This limit is less stringent than the analogue limit and should only be applied where analogue TV is no longer in use.
e	The bandwidth and frequency steps to be used for the GPS and GLONASS L1 civil band are respectively 9 kHz and 5 kHz rather than the bandwidth and frequency steps defined in Table 1 and Table 2 for services above 30 MHz.
f	RKE limits are defined over a large frequency band. Any modification of the average limit around the operating frequency due to sensitivity of RKE systems should be defined in the test plan.
g	The values given in the table apply to the 1 574,42 MHz to 1 576,42 MHz frequency range. The limits for the whole GPS L1 frequency range are given in Figure 8a.
h	The values given in the table apply to the 1 597,781 MHz to 1 609,594 MHz frequency range. The limits for the whole GLONASS L1 frequency range are given in Figure 8b.

a) Stereo signals can be more susceptible to disturbance than monaural signals in the FM broadcast band. This phenomenon has been factored into the FM (76 MHz to 108 MHz) limits.

b) All values listed in this table are valid for the bandwidths in Table 1 and Table 2. If measurements have to be performed with different bandwidths than those specified in Table 1 and Table 2 because of ambient noise requirements, then applicable limits are defined in the test plan and the applied limits and bandwidths are documented in the test report.

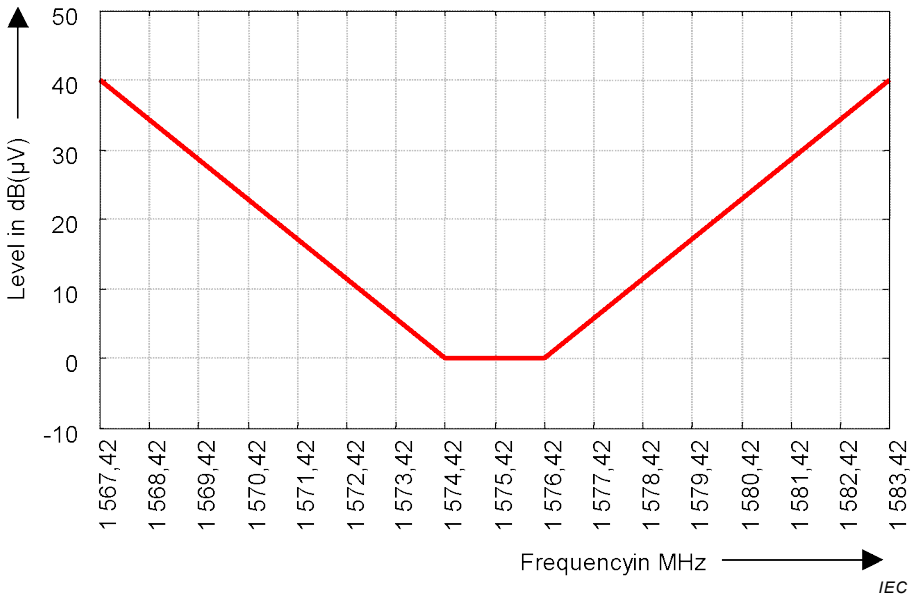

Figure 8a – GPS band 1 567,42 MHz to 1 583,42 MHz

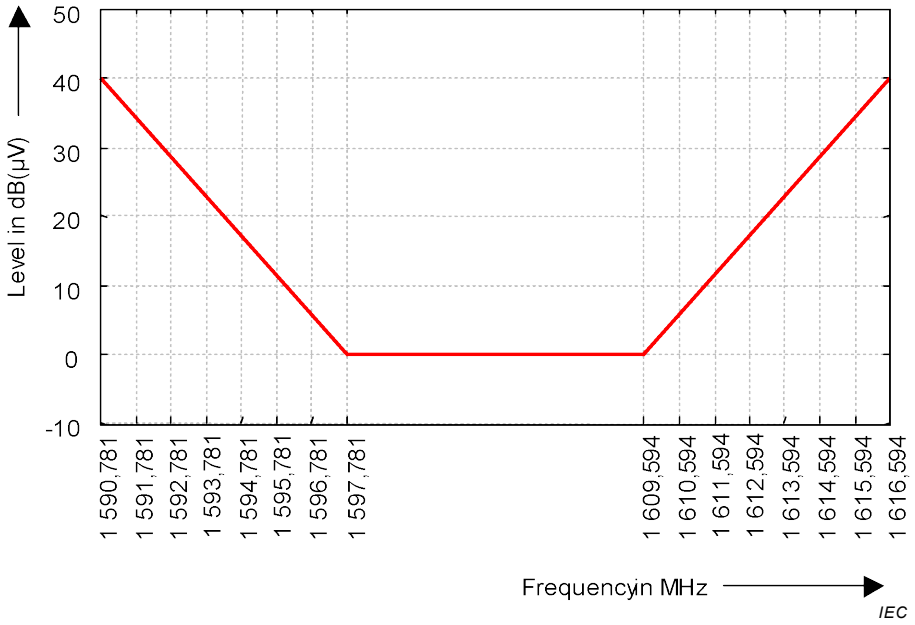

Figure 8b – GLONASS band 1 590,781 MHz to 1 616,594 MHz

Figure 8 – Average limit for radiated disturbance from vehicles

NOTE If an active antenna is used, the noise floor can increase. The additional noise floor depends on the type of antenna and is subtracted from the measured value to determine the real value of the disturbance using the following formula (all terms in µV):

$$U_{\text{real Disturbance}} = \sqrt{U^2_{\text{Measured}} - U^2_{\text{Antenna noise}}} \quad (2)$$

A relaxation of the limit because of the active antenna noise floor does not guarantee compliance. Subsequent changes to the active antenna design can result in non-compliance. This topic remains under study. Annex D describes a method to determine the noise floor of an active antenna.

6 Measurement of components and modules

6.1 General

For LV components test methods and requirements are defined in this clause.

For LV/HV components additional test methods and limits are defined in Annex I.

For LV/HV components:

- Conducted emission (voltage method) on LV lines shall be performed according to setup defined in Clause I.2 and requirement in 6.3.4
- Conducted emission (voltage method) on HV lines shall be performed according to setup defined in Clause I.2 and requirement in I.2.3.
- Conducted emission (current method) on LV/HV lines shall be performed according to setup defined in Clause I.3 and requirement in 6.4.3.

6.2 Test equipment

6.2.1 Reference ground plane

The reference ground plane shall be defined as the top metallic surface of the test bench/table.

The reference ground plane shall be made of 0,5 mm thick (minimum) copper, brass, bronze or galvanized steel.

The minimum size of the reference ground plane for conducted emissions (voltage method) shall be 1 000 mm × 400 mm.

The minimum size of the reference ground plane for conducted emissions (current probe method) shall be 2 500 mm × 400 mm.

The minimum width of the reference ground plane for radiated emissions shall be 1 000 mm. The minimum length of the reference ground plane for radiated emissions shall be 2 000 mm, or underneath the entire equipment plus 200 mm, whichever is larger.

The height of the reference ground plane (test bench) shall be (900 ± 100) mm above the floor.

The distance from the edge of the ground strap to the edge of the next strap shall not be greater than 300 mm. The maximum length to width ratio for the ground straps shall be 7:1.

NOTE Because of resonances of the reference ground plane the location, width and length of the bond straps can influence the measurement results. A sufficient number of low inductive bond straps are used to ensure a low impedance connection to the shielded room.

6.2.2 Power supply and AN

For the tests defined in 6.3, 6.4, 6.5, 6.6 and 6.7, each positive EUT power supply lead shall be connected to the power supply through an artificial network. The AN shall have a nominal 5 μH inductance. The impedance characteristics and a suggested schematic are shown in Annex E.

Power supply is assumed to be negative ground. If the EUT utilizes a positive ground then the test setups shown in the figures need to be adapted accordingly. Depending on the intended EUT installation in the vehicle:

– EUT remotely grounded (vehicle power return line longer than 200 mm): two artificial networks are required, one for the positive supply line and one for the power return line;
– EUT locally grounded (vehicle power return line 200 mm or shorter): one artificial network is required, for the positive supply.

The AN(s) shall be mounted directly on the reference ground plane. The case(s) of the AN(s) shall be bonded to the reference ground plane. The DC resistance between the ground of the AN measurement port and the ground plane shall not exceed 2,5 mΩ.

The power supply return shall be connected to the reference ground plane (between the power supply and the AN(s)).

The measuring port of the AN not connected to the measuring instrument shall be terminated with a 50 Ω load.

6.2.3 Load simulator

The load simulator includes sensors and actuators, and terminates the test harness connected to the EUT.

To ensure sufficient reproducibility the same termination shall be used for each measurement either by using special termination equipment (e.g. artificial networks, filters) – located at the RF boundary – or by using the same load simulator.

6.3 Conducted emissions from components/modules – Voltage method

6.3.1 General

Voltage measurements are able to characterize the emissions on single leads only. The test method cannot be used to characterize the radiated emission transmitted e.g. by different antenna structures on the printed board of electronic components or to characterize the efficiency of shielding. Therefore, voltage measurements are not able to characterize the complete EUT emission. At lower frequencies (e.g. in the AM-bands) voltage measurements usually ensure more dynamic range than radiated measurements.

6.3.2 Test setup

6.3.2.1 Location of EUT

The EUT shall be placed on a non-conductive, low relative permittivity material ($\varepsilon_r \leq 1{,}4$), at (50 ± 5) mm above the reference ground plane.

The case of the EUT shall not be grounded to the reference ground plane unless it is intended to simulate the actual vehicle configuration.

All sides of the EUT shall be at least 100 mm from the edge of the reference ground plane. In the case of a grounded EUT, the ground connection point shall also have a minimum distance of 100 mm from the edge of the reference ground plane.

6.3.2.2 Location of the test harness

The power supply line(s) between the connector of the AN(s) and the connector(s) of the EUT shall have a standard length $l_p = \left(200\ {}^{+200}_{0}\right)$ mm.

The power supply lines shall be placed in a straight line on a non-conductive, low relative permittivity material ($\varepsilon_r \leq 1{,}4$), at (50 ± 5) mm above the reference ground plane.

To minimize the coupling between power supply lines and input/output leads (which includes any dedicated input/output signal return leads), the space between those lead types shall be maximized (≥200 mm from or perpendicular to the power supply lines connecting the AN(s) and the EUT). Unless otherwise specified in the test plan the test harness (excluding power lines) should be placed on a low relative permittivity material ($\varepsilon_r \leq 1{,}4$), at (50 ± 5) mm above the reference ground plane.

The total length of the test harness (excluding power lines) shall not exceed 2 m. The wiring type is defined by the actual EUT application and requirement.

All leads and cables shall be located at a minimum distance of 100 mm from the edge of the reference ground plane.

6.3.2.3 Location of the load simulator

Preferably, the load simulator shall be placed directly on the reference ground plane. If the load simulator has a metallic case, this case shall be bonded to the reference ground plane.

NOTE Alternatively, the load simulator can be located adjacent to the reference ground plane (with the case of the load simulator bonded to the reference ground plane) or outside of the test chamber, provided the test harness from the EUT passes through an **RF boundary** bonded to the reference ground plane.

When the load simulator is located on the reference ground plane, the DC power supply lines of the load simulator shall be connected directly to the power supply and not through the AN(s).

6.3.3 Test procedure

The general arrangement of the disturbance source (EUT), connecting harnesses, etc. represents a standardised test condition. Any deviations from the standard test setup (e.g. test harness length) shall be agreed upon prior to testing and recorded in the test report.

The EUT shall be made to operate under typical loading and other conditions as in the vehicle such that the maximum emission state occurs. These operating conditions shall be clearly defined in the test plan to ensure supplier and customer are performing identical tests.

The conducted emissions on power lines are measured successively on positive power supply and power return by connecting the measuring instrument on the measuring port of the related AN, with the measuring port of the AN in the other supply lines being terminated with a 50 Ω load.

For voltage measurements the following applies.

- For EUT remotely grounded (vehicle power return line longer than 200 mm), the voltage measurements shall be made on each lead (supply and return) relative to the reference ground plane (see Figure 9).
- For EUT locally grounded (vehicle power return line 200 mm or shorter), voltage measurements on power supply leads shall be made relative to the reference ground plane (see Figure 10).
- Generators/alternators shall be loaded with a battery and parallel resistor combination, and connected to the artificial network in the manner shown in Figure 11. The load current, operating speed, harness length and other conditions shall be defined in the test plan.
- For the tests of ignition systems refer to Figure 12.

NOTE For EUTs with multiple positive power supply connections and/or multiple power return connections, the measurements (on power supply and on power return) can be performed with all power supply connections tied together at the AN and all power return connections tied together at the other AN. The details of the AN connection are defined in the test plan.

Dimensions in millimetres – not to scale

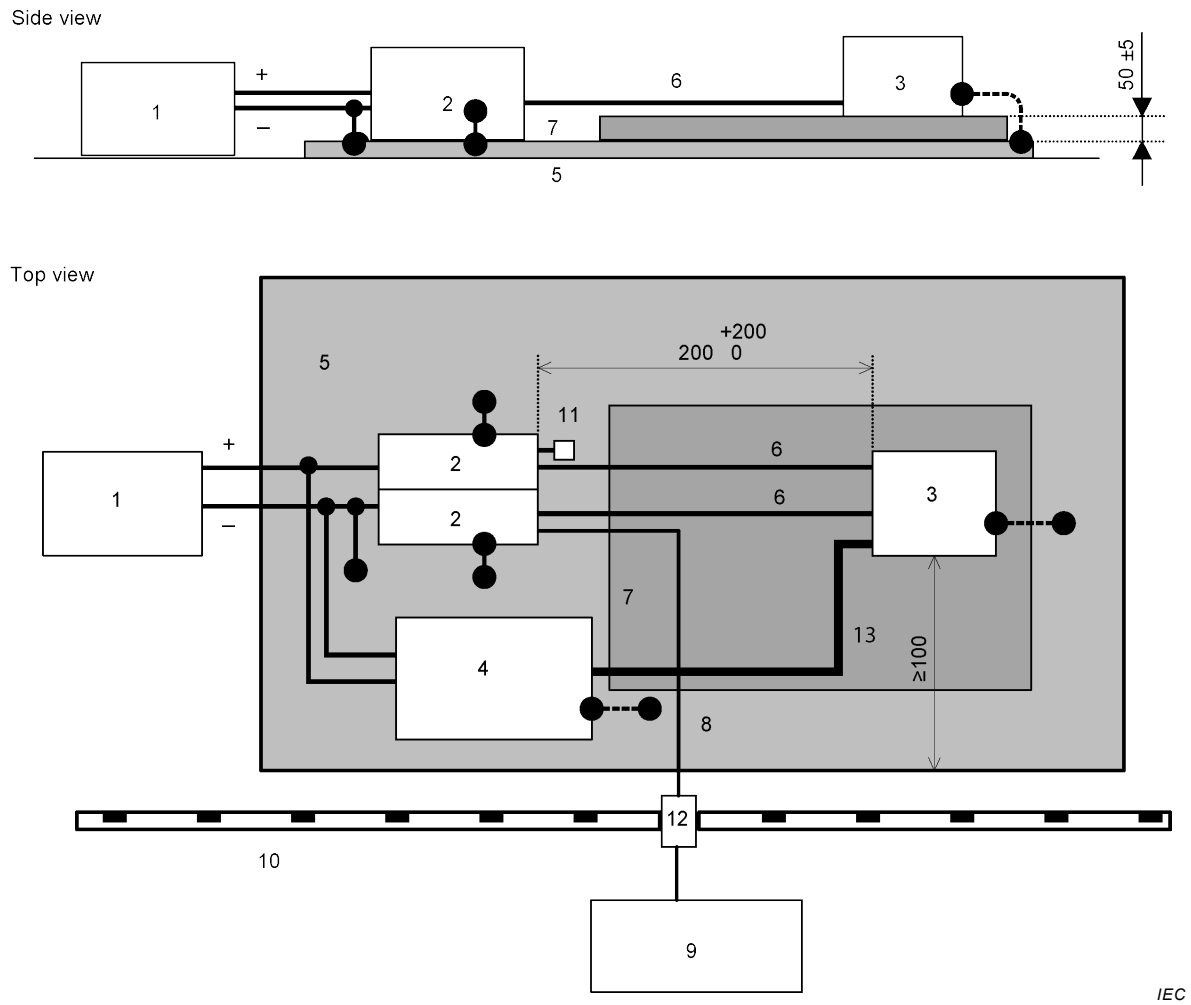

Key

1 Power supply (may be placed on the reference ground plane)

2 Artificial network

3 EUT (housing grounded if required in test plan)

4 Load simulator (metallic casing grounded if required in test plan)

5 Reference ground plane

6 Power supply lines

7 Low relative permittivity support ($\varepsilon_r \leq 1{,}4$)

8 High-quality coaxial cable e.g. double-shielded (50 Ω)

9 Measuring instrument

10 Shielded enclosure

11 50 Ω load

12 Bulkhead connector

13 Test harness (excluding power lines)

The EUT housing ground lead, when required in the test plan, should not be longer than 150 mm.

Figure 9 – Conducted emissions – Example of test setup for EUT with power return line remotely grounded

Dimensions in millimetres – not to scale

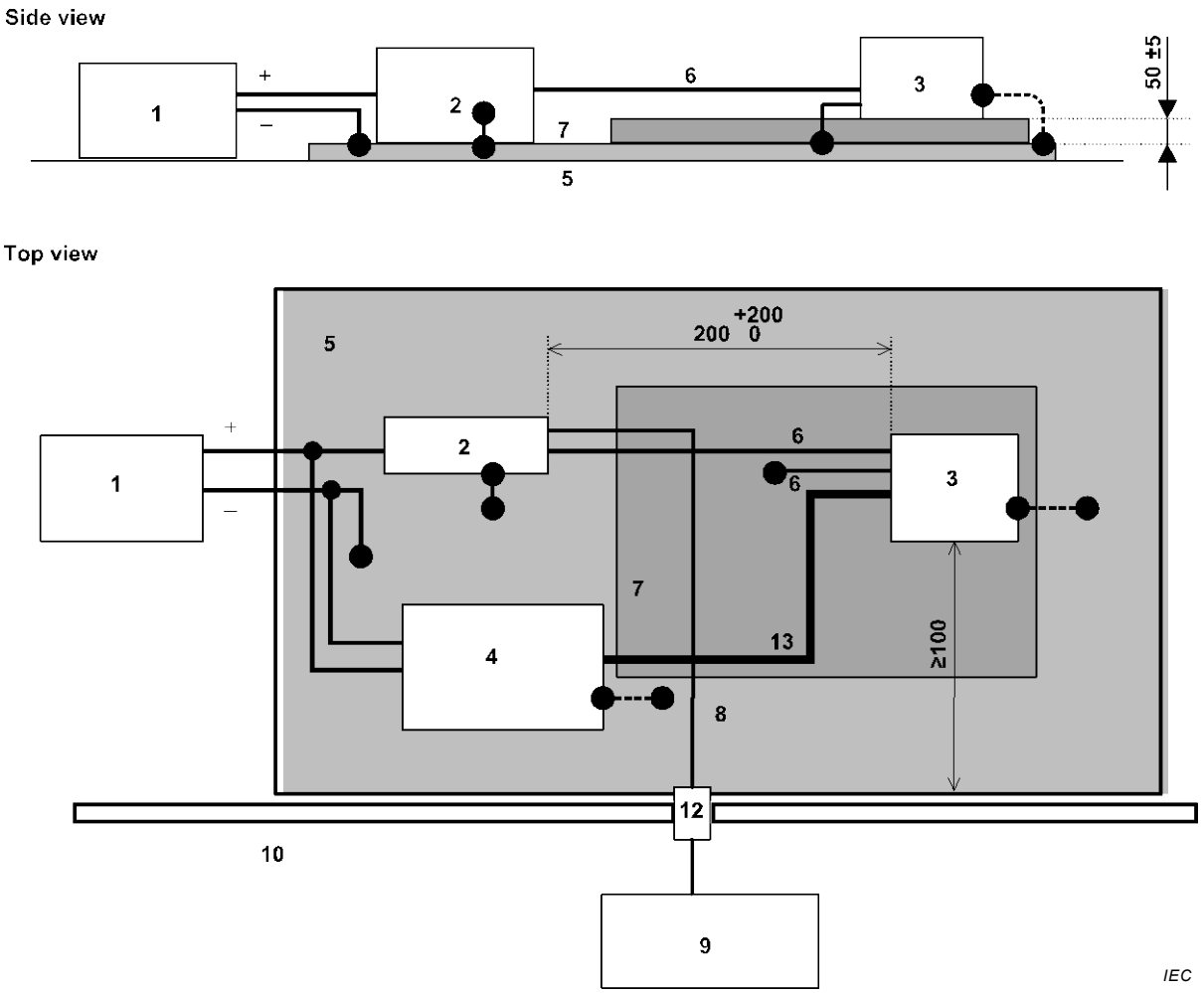

Key

1 Power supply (may be placed on the reference ground plane)

2 Artificial network

3 EUT (housing grounded if required in test plan)

4 Load simulator (metallic casing grounded if required in test plan)

5 Reference ground plane

6 Power supply line

7 Low relative permittivity support ($\varepsilon_r \leq 1{,}4$)

8 High-quality coaxial cable e.g. double-shielded (50 Ω)

9 Measuring instrument

10 Shielded enclosure

12 Bulkhead connector

13 Test harness (excluding power lines)

The EUT housing ground lead, when required in the test plan, should not be longer than 150 mm.

Figure 10 – Conducted emissions – Example of test setup for EUT with power return line locally grounded

Dimensions in millimetres – not to scale

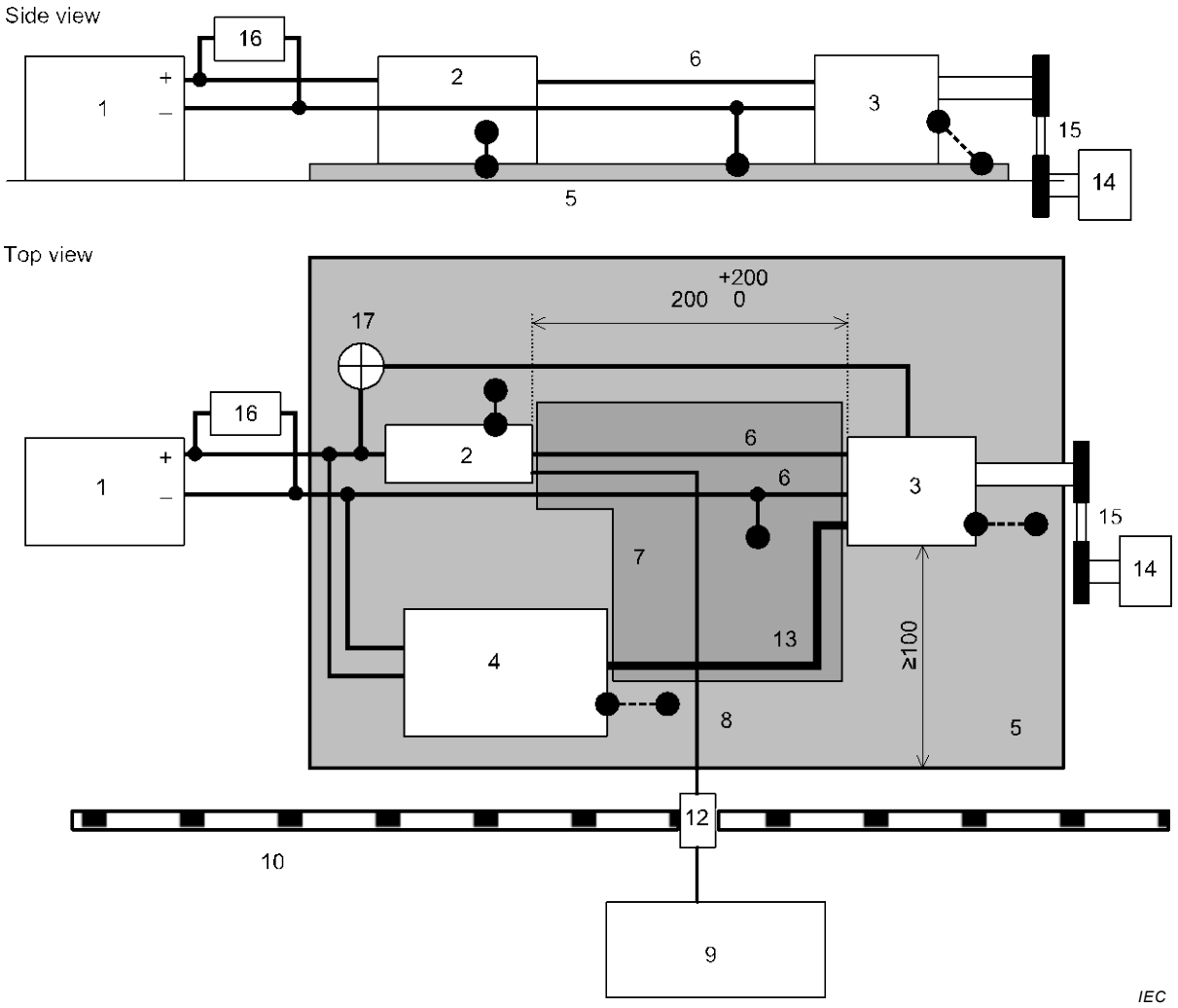

Key

1 Battery (may be placed on the reference ground plane)
2 Artificial network
3 EUT
4 Load simulator (metallic casing grounded if required in test plan)
5 Reference ground plane
6 Power supply lines
7 Low relative permittivity support ($\varepsilon_r \leq 1{,}4$)
8 High-quality coaxial cable e.g. double-shielded (50 Ω)
9 Measuring instrument
10 Shielded enclosure
12 Bulkhead connector
13 Test harness (excluding power lines)
14 Motor (air/low emissions)
15 Non-conductive belt/coupler
16 Load resistor
17 Indicator lamp/control resistor (if applicable)

The EUT housing ground lead, when required in the test plan, should not be longer than 150 mm.

Figure 11 – Conducted emissions – Example of test setup for alternators and generators

Dimensions in millimetres – not to scale

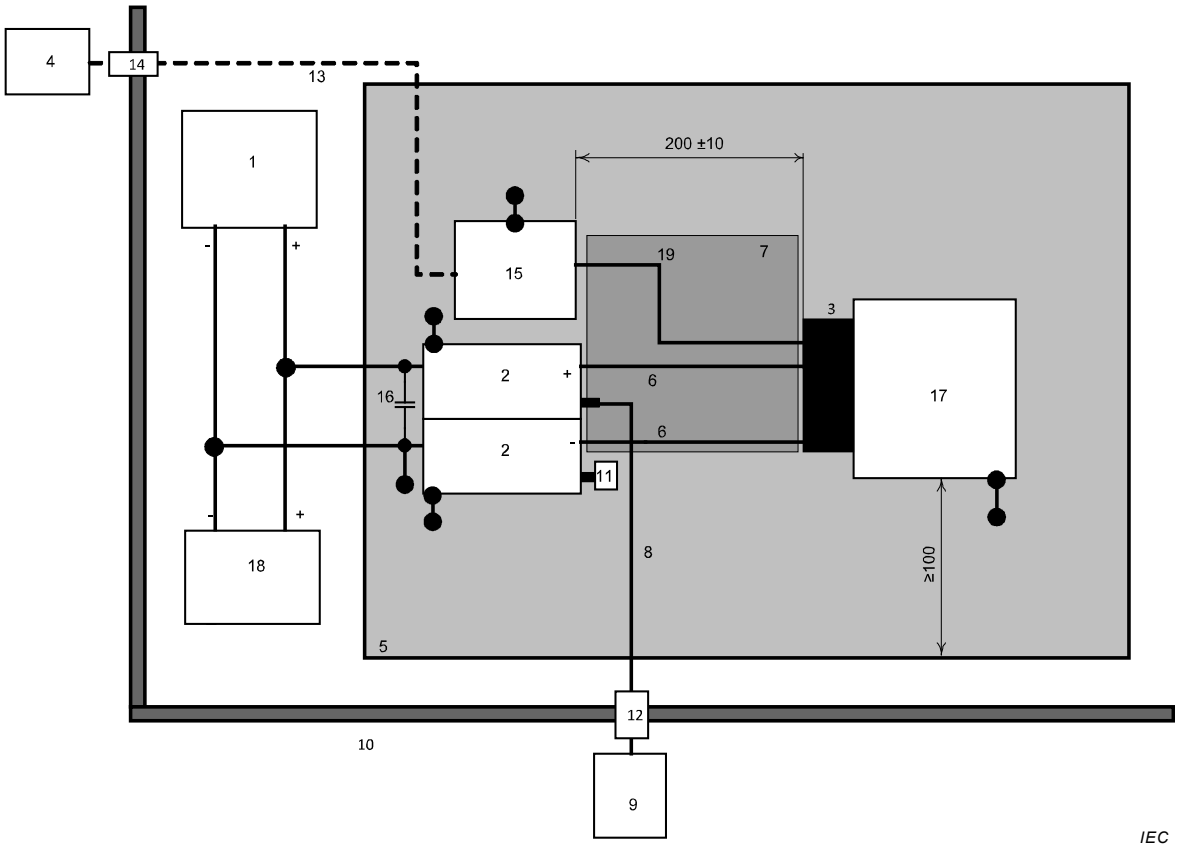

Key

1 Power supply (may be placed on the reference ground plane)
2 Artificial network
3 Pencil coil
4 ECU simulator (metallic casing grounded if required in test plan)
5 Reference ground plane
6 Power supply lines
7 Low relative permittivity support ($\varepsilon_r \leq 1{,}4$)
8 High-quality coaxial cable e.g. double-shielded (50 Ω)
9 Measuring instrument
10 Shielded enclosure
11 50 Ω load
12 Bulkhead connector
13 Optical fibres
14 Fibre optic feed through
15 Optical fibre converter
16 1 000 μF capacitor
17 Engine simulator
18 Battery
19 Signal line

The pencil coil housing ground lead, when required in the test plan, should not be longer than 150 mm.

Figure 12 – Conducted emissions – Example of test setup for ignition system components

6.3.4 Limits for conducted disturbances from components/modules – Voltage method

The level class to be used (as a function of the frequency band) shall be agreed upon between the vehicle manufacturer and the component supplier.

NOTE The method to be used for characterisation of the Voltage Division Factor of the AN, sometimes referred to as insertion loss, is given in Clause A.8 of CISPR 16-1-2:2014.

It is recommended for acceptable radio reception in a vehicle that the conducted noise should not exceed the values shown in Table 5, peak and average or quasi-peak and average,

respectively. Since the mounting location, vehicle body construction and harness design can affect the coupling of radio disturbances to the on-board radio, multiple limit levels are defined.

Table 5 – Examples of limits for conducted disturbances – Voltage method

Service / Band	Frequency MHz	Levels in dB(μV)														
		Class 5			Class 4			Class 3			Class 2			Class 1		
		Peak	Quasipeak	Average	Peak	Quasipeak	Average	Peak	Quasipeak	Average	Peak	Quasipeak	Average	Peak	Quasipeak	Average
BROADCAST																
LW	0,15 to 0,30	70	57	50	80	67	60	90	77	70	100	87	80	110	97	90
MW	0,53 to 1,8	54	41	34	62	49	42	70	57	50	78	65	58	86	73	66
SW	5,9 to 6,2	53	40	33	59	46	39	65	52	45	71	58	51	77	64	57
FM	76 to 108	38	25	18	44	31	24	50	37	30	56	43	36	62	49	42
TV Band I	41 to 88	34	–	24	40	–	30	46	–	36	52	–	42	58	–	48
TV Band III	174 to 230	Conducted emission – Voltage method Not applicable														
DAB III	171 to 245															
TV Band IV	468 to 944															
DTTV	470 to 770															
DAB L Band	1 447 to 1 494															
SDARS	2 320 to 2 345															
MOBILE SERVICES																
CB	26 to 28	44	31	24	50	37	30	56	43	36	62	49	42	68	55	48
VHF	30 to 54	44	31	24	50	37	30	56	43	36	62	49	42	68	55	48
VHF	68 to 87	38	25	18	44	31	24	50	37	30	56	43	36	62	49	42
VHF	142 to 175	Conducted emission – Voltage method Not applicable														
Analogue UHF	380 to 512															
RKE	300 to 330															
RKE	420 to 450															
Analogue UHF	820 to 960															
GSM 800	860 to 895															
EGSM/GSM 900	925 to 960															
GPS L1 civil	1 567 to 1 583															
GLONASS L1	1 591 to 1 613															
GSM 1800 (PCN)	1 803 to 1 882															
GSM 1900	1 850 to 1 990															
3G / IMT 2000	1 900 to 1 992															
3G / IMT 2000	2 010 to 2 025															
3G / IMT 2000	2 180 to 2 172															
Bluetooth/802.11	2 400 to 2 500															

a) All values listed in this table are valid for the bandwidths in Table 1 and Table 2. If measurements have to be performed with different bandwidths than those specified in Table 1 and Table 2 because of noise floor requirements, then applicable limits are defined in the test plan.

b) Where multiple bands use the same limits the user selects the appropriate bands over which to test. When the test plan includes bands that overlap the test plan defines the applicable limit.

c) Although the limits for peak, quasi-peak and average detectors are shown, measurements with all three detectors are not required. See Figure 1.

6.4 Conducted emissions from components/modules – Current probe method

6.4.1 Test setup

6.4.1.1 Location of the EUT

The EUT shall be placed on a non-conductive, low relative permittivity material ($\varepsilon_r \leq 1{,}4$), at (50 ± 5) mm above the reference ground plane.

The case of the EUT shall not be grounded to the reference ground plane unless it is intended to simulate the actual vehicle configuration.

The EUT shall be at least 100 mm from the edge of the reference ground plane and at least 500 mm from the chamber wall. The test setup shall simulate the actual vehicle configuration and shall specify:

- remote versus local grounding;
- the use of an insulating spacer;
- and the electrical connection of the EUT case to the reference ground plane.

The test setup is shown in Figure 13.

6.4.1.2 Location of the test harness

The test harness shall be $\left(1\,700\ {}^{+300}_{0}\right)$ mm long (or as agreed upon in the test plan), and shall be placed on a non-conductive, low relative permittivity material ($\varepsilon_r \leq 1{,}4$), positioned (50 ± 5) mm above the reference ground plane. The test harness wires shall be nominally parallel and adjacent unless otherwise defined in the test plan.

6.4.2 Test procedure

The current probe (see CISPR 16-1-2) shall be mounted around the complete harness (including all wires). If the EUT has multiple connectors on the unit resulting in multiple wire bundles, the test plan shall define which wires shall be included in the probe for measurement. In the absence of any definition, measurements shall be made for each bundle (connector) independently and for all wires together.

The shielded harnesses used for this test shall be representative of the vehicle application in terms of cable construction and connector termination as defined in the test plan.

If the EUT wiring has too many wires to be accommodated in the measurement probe, the test plan may define the wires to be measured and this shall be included in the test report.

Measure the emissions with the probe positioned 50 mm and 750 mm from the EUT.

In most cases, the position of maximum emission will be as close to the EUT connector as possible. Where the EUT is equipped with a metal shell connector, the probe shall be clamped to the cable immediately adjacent to the connector shell, but not around the connector shell itself. The test plan shall simulate the actual vehicle configuration and shall

specify remote versus local grounding, the use of an insulating spacer and the electrical connection of the EUT case to the reference ground plane.

NOTE Some additional measurements can be defined in the test plan with only the positive supply wire in the probe and/or only the negative supply wire in the probe. For these test configurations limits are to be defined in the test plan.

Dimensions in millimetres – not to scale

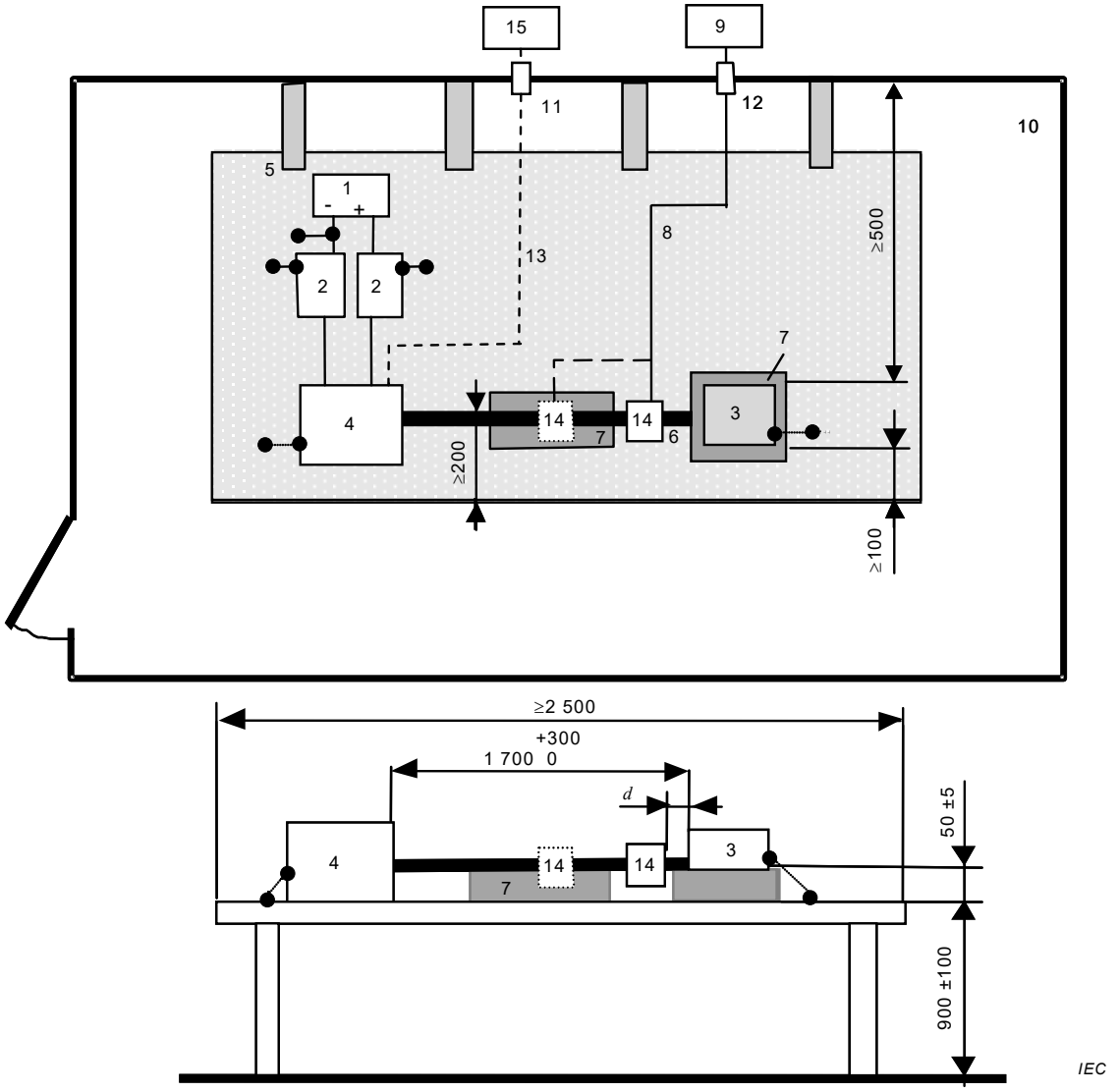

Key

1 Power supply

2 Artificial network

3 EUT (connected to ground if specified in the test plan)

4 Load simulator (metallic casing grounded if required in test plan)

5 Reference ground plane

6 Wiring harness

7 Low relative permittivity support ($\varepsilon_r \leq 1{,}4$)

8 High-quality coaxial cable e.g. double-shielded (50 Ω)

9 Measuring instrument

10 Shielded enclosure

11 Fibre optic feed through

12 Bulkhead connector

13 Optical fibres

14 Current probe (represented at 2 positions)

15 Stimulation and monitoring system

d The distance from the EUT to the closest probe position

Figure 13 – Conducted emissions – Example of test setup for current probe measurements

6.4.3 Limits for conducted disturbances from components/modules – Current probe method

The level class to be used (as a function of the frequency band) shall be agreed upon between the vehicle manufacturer and the component supplier.

It is recommended for acceptable radio reception in a vehicle that the conducted noise should not exceed the values shown in Table 6, peak and average or quasi-peak and average limits, respectively. Since the mounting location, vehicle body construction and harness design can affect the coupling of radio disturbances to the on-board radio, multiple limit levels are defined.

Table 6 – Examples of limits for conducted disturbances – Current probe method

Service / Band	Frequency MHz	Levels in dB(μA)														
		Class 5			Class 4			Class 3			Class 2			Class 1		
		Peak	Quasipeak	Average	Peak	Quasipeak	Average	Peak	Quasipeak	Average	Peak	Quasipeak	Average	Peak	Quasipeak	Average
BROADCAST																
LW	0,15 to 0,30	50	37	30	60	47	40	70	57	50	80	67	60	90	77	70
MW	0,53 to 1,8	26	13	6	34	21	14	42	29	22	50	37	30	58	45	38
SW	5,9 to 6,2	19	6	−1	25	12	5	31	18	11	37	24	17	43	30	23
FM	76 to 108	4	−9	−16	10	−3	−10	16	3	−4	22	9	2	28	15	8
TV Band I	41 to 88	0	–	−10	6	–	−4	12	–	2	18	–	8	24	–	14
DAB III	171 to 245	−2	–	−12	4	–	−6	10	–	0	16	–	6	22	–	12
TV Band III	174 to 230	Conducted emission – Control/signal lines Not applicable														
TV Band IV	468 to 944															
DTTV	470 to 770															
DAB L Band	1 447 to 1 494															
SDARS	2 320 to 2 345															
MOBILE SERVICES																
CB	26 to 28	10	−3	−10	16	3	−4	22	9	2	28	15	8	34	21	14
VHF	30 to 54	10	−3	−10	16	3	−4	22	9	2	28	15	8	34	21	14
VHF	68 to 87	4	−9	−16	10	1	−10	16	7	−4	22	13	2	28	15	8
VHF	142 to 175	4	−9	−16	10	1	−10	16	7	−4	22	13	2	28	15	8
Analogue UHF	380 to 512	Conducted emission – Control/signal lines Not applicable														
RKE	300 to 330															
RKE	420 to 450															
Analogue UHF	820 to 960															
GSM 800	860 to 895															
EGSM/GSM 900	925 to 960															
GPS L1 civil	1 567 to 1 583															
GLONASS L1	1 591 – 1 613															
GSM 1800 (PCN)	1 803 to 1 882															
GSM 1900	1 850 to 1 990															
3G / IMT 2000	1 900 to 1 992															
3G / IMT 2000	2 010 to 2 025															
3G / IMT 2000	2 180 to 2 172															
Bluetooth/802.11	2 400 to 2 500															

a) All values listed in this table are valid for the bandwidths in Table 1 and Table 2. If measurements have to be performed with different bandwidths than those specified in Table 1 and Table 2 because of noise floor requirements, then applicable limits are defined in the test plan.

b) Where multiple bands use the same limits the user selects the appropriate bands over which to test. When the test plan includes bands that overlap the test plan defines the applicable limit.

c) Although the limits for peak, quasi-peak and average detectors are shown, measurements with all three detectors are not required. See Figure 1.

6.5 Radiated emissions from components/modules – ALSE method

6.5.1 General

Measurements of radiated field strength shall be made in an ALSE to eliminate the high levels of extraneous disturbance from electrical equipment and broadcasting stations.

NOTE 1 Conducted emissions will contribute to the radiated emissions measurements because of radiation from the wiring in the test setup. Therefore, conformance with the conducted emissions requirements can be established before performing the radiated emissions test.

NOTE 2 Disturbance to the vehicle on-board receiver can be caused by direct radiation from one or more leads in the vehicle wiring harness. This coupling mode to the vehicle receiver affects both the type of testing and the means of reducing the disturbance at the source.

NOTE 3 Vehicle components which are not effectively grounded to the vehicle by short ground leads, or which have several harness leads carrying the disturbance voltage, will have radiated emissions that do not correlate well with its conducted emissions. This has been shown to give better correlation with the complete vehicle test for components installed in this way.

6.5.2 Test setup

6.5.2.1 General

For radiated emissions measurements, the arrangement of the EUT, test harness, load simulator and measuring equipment shall be equivalent to the examples shown in Figure 15, Figure 16, Figure 17 and Figure 18. Any deviations from the standard test harness length, etc. shall be agreed upon prior to testing and recorded in the test report.

6.5.2.2 Antenna systems

Measurements shall be made using linearly polarised electric field antennas that have a nominal 50 Ω output impedance.

To improve consistency of results between laboratories, the following antennas are recommended:

a) 0,15 MHz to 30 MHz — 1 m vertical monopole (where this is not 50 Ω, a suitable antenna matching unit shall be used);

b) 30 MHz to 300 MHz — a biconical antenna;

c) 200 MHz to 1 000 MHz — a log-periodic antenna;

d) 1 000 MHz to 2 500 MHz — a horn or log periodic antenna.

The method to be used for characterization of the vertical monopole (rod) antenna is given in CISPR 16-1-4:2010, Annex B.

Use the 1 m method in SAE ARP 958.1 Rev D February 2003 [8] for determining biconical, log periodic and horn antenna factors.

NOTE Biconical antennas usually have a VSWR of up to 10:1 in the frequency range of 30 MHz to 80 MHz. Therefore an additional measurement error can occur when the receiver input impedance differs from 50 Ω. The use of an attenuator (3 dB minimum) at the receiver's input or the input of an additional preamplifier (if possible) will keep this additional error low.

6.5.2.3 Antenna matching unit for monopole antenna

Correct impedance matching between the antenna and the measuring instrument of 50 Ω shall be maintained in the frequency ranges selected for the test. There shall be a maximum VSWR of 2:1 at the output port of the matching unit. Appropriate correction shall be made for any attenuation/gain of the antenna system from the antenna to the receiver.

NOTE Care is taken to ensure that input voltages do not exceed the pulse input rating of the unit which may cause overloading. This is particularly important when active matching units are used.

6.5.2.4 Location of the EUT

The EUT shall be placed on a non-conductive, low relative permittivity material ($\varepsilon_r \leq 1{,}4$), at (50 ± 5) mm above the reference ground plane.

The case of the EUT shall not be grounded to the reference ground plane unless it is intended to simulate the actual vehicle configuration.

The side of the EUT, which is nearest to the front edge of the reference ground plane, shall be located at a distance of (200 ± 10) mm from the front edge of the reference ground plane.

6.5.2.5 Test harness and location

The total length of the test harness between the EUT and the load simulator (or the RF boundary) shall not exceed 2 000 mm (or as defined in the test plan). The wiring type is defined by the actual system application and requirement.

Care shall be taken with the power lines that these are also not exceeding 2 000 mm. Where the power is taken separately from the load box, the AN shall be located such that the power lines can be maintained at less than 2 000 mm. If the power is derived from the load box, the line between the load box and the AN shall be kept as short as is practically possible to avoid excessive length being added to the power lines.

The test harness shall be placed on a non-conductive, low relative permittivity material ($\varepsilon_r \leq 1{,}4$), at (50 ± 5) mm above the reference ground plane.

The length of test harness parallel to the front of the reference ground plane shall be (1 500 ± 75) mm.

The long segment of test harness shall be located parallel to the edge of the ground plane facing the antenna at a distance of (100 ± 10) mm from the edge. Location of the EUT and load simulator requires that the harness bend angle shall be $\left(90\ ^{+45}_{0}\right)$ degrees as shown in Figure 14.

The shielded harnesses used for this test shall be representative of the vehicle application in terms of cable construction and connector termination as defined in the test plan.

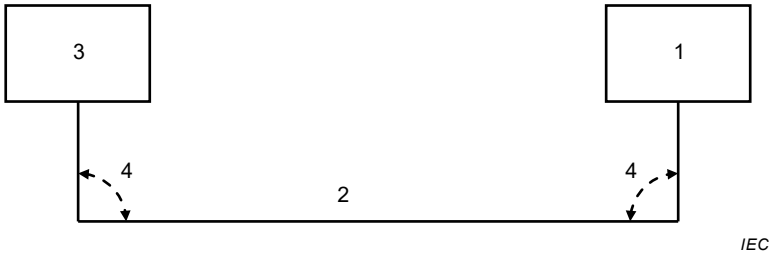

Key

1 EUT

2 Test harness

3 Load simulator

4 Angle $\left(90\ ^{+45}_{0}\right)$ degrees

Figure 14 – Test harness bending requirements

6.5.2.6 Location of the load simulator

Preferably, the load simulator shall be placed directly on the reference ground plane. If the load simulator has a metallic case, this case shall be bonded to the reference ground plane.

Alternatively, the load simulator may be located adjacent to the reference ground plane (with the case of the load simulator bonded to the reference ground plane) or outside of the test chamber, provided that the test harness from the EUT passes through an RF boundary bonded to the reference ground plane. The layout of the test harness that is connected to the load simulator shall be defined in the test plan and recorded in the test report.

When the load simulator is located on the reference ground plane, the DC power supply lines of the load simulator shall be connected through the AN(s).

6.5.2.7 Location of the measuring antenna

The phase centre of the measuring antenna shall be (100 ± 10) mm above the reference ground plane for the biconical, log-periodic and horn antenna.

The height of the counterpoise of the rod antenna shall be (+10 / –20) mm relative to the reference ground plane and shall be bonded (counterpoise full width) to the reference ground plane.

For radiated emissions tests, the shielded enclosure shall be of sufficient size to ensure that neither the EUT nor the test antenna shall be closer than 1 m from the walls or ceiling, or to the nearest surface of the absorber material used thereon. No part of any antenna radiating element shall be closer than 250 mm to the floor.

The distance between the longitudinal part (1 500 mm length) of the wiring harness and the reference point of the antenna shall be $(1\ 000 \pm 10)$ mm. For a biconical antenna no part of the antenna shall be closer to the wiring harness or EUT than 700 mm.

The reference point of the antenna is defined as

– the vertical monopole element for rod antennas,

– the phase centre (mid-point) for biconical antennas,

– the tip for antennas with log-periodic elements,

– the front aperture for horn antennas.

Each antenna (excluding the rod antenna) shall be calibrated for this reference point for a 1 000 mm measuring distance (see 6.5.2.2).

NOTE 1 The rod antenna is excluded because calibration is achieved by using the method defined in CISPR 16-1-4.

The phase centre of the antenna shall be in line with the centre of the longitudinal part of the wiring harness for frequencies up to 1 000 MHz.

The phase center of the antenna for frequencies above 1 000 MHz shall be in line with the EUT.

NOTE 2 The users of this standard are aware that antenna manufacturers can give:

– independent antenna factors for horizontal and vertical polarisations; in this case the appropriate antenna factor are used for measurement in each polarisation.

– a single antenna factor; in this case this antenna factor is used for measurements in both polarisations.

6.5.3 Test procedure

The EUT shall be made to operate under typical loading and other conditions as in the vehicle such that the maximum emission state occurs. These operating conditions shall be clearly defined in the test plan to ensure supplier and customer can perform identical tests. The orientation(s) of the EUT for radiated emission measurements shall be defined in the test plan.

From 150 kHz to 30 MHz measurements shall be performed in vertical polarisation only.

From 30 MHz to 2 500 MHz measurements shall be performed in vertical and horizontal polarisations.

Dimensions in millimetres – not to scale

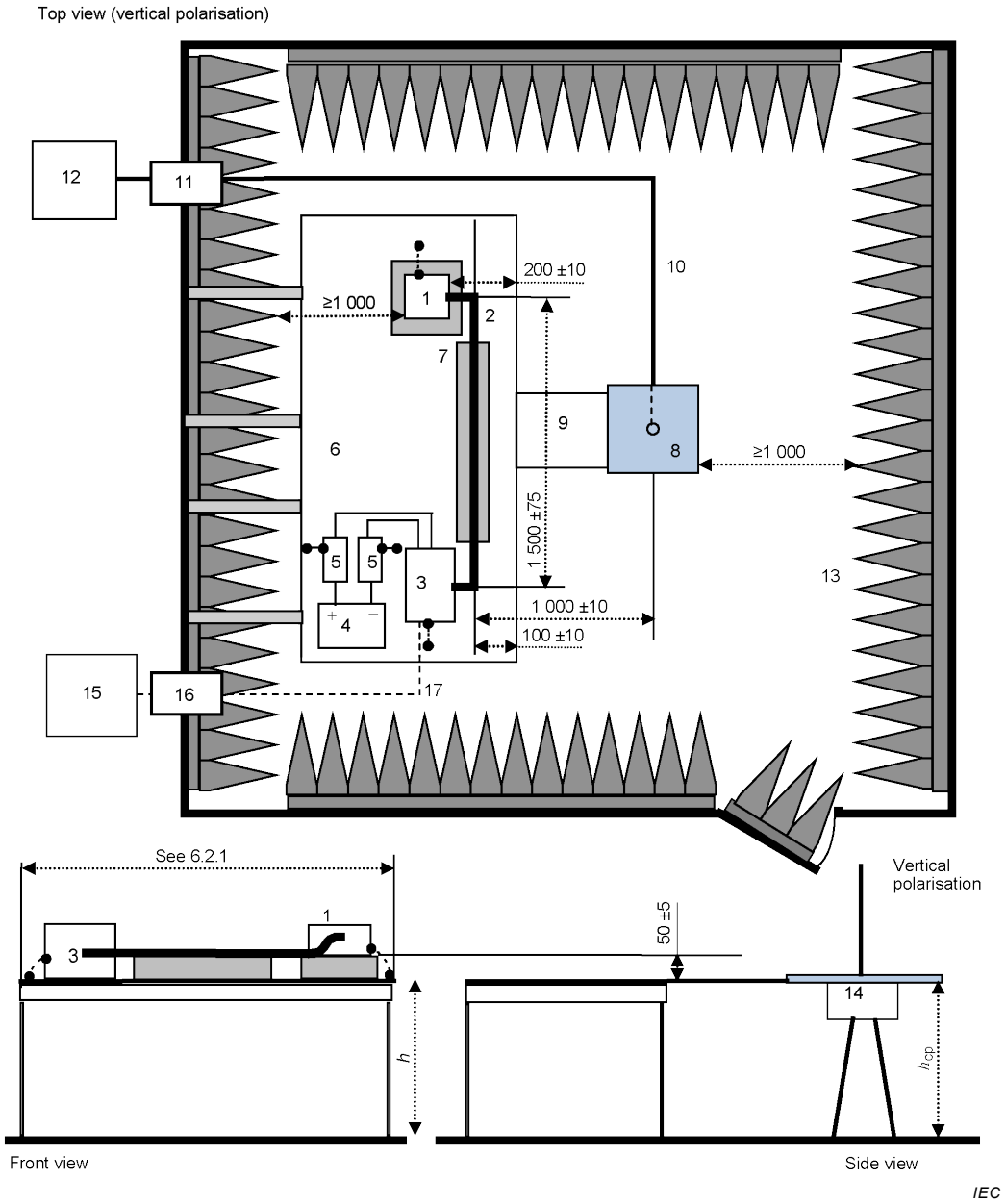

Key

1 EUT (grounded locally if required in test plan)

2 Test harness

3 Load simulator (placement and ground connection according to 6.5.2.6)

4 Power supply (location optional)

5 Artificial network (AN)

6 Reference ground plane (bonded to shielded enclosure)

7 Low relative permittivity support ($\varepsilon_r \leq 1{,}4$)

8 Rod antenna with counterpoise
(dimensions: 600 mm by 600 mm typical)

h = (900 ± 100) mm

h_{cp} = h + (+10 / −20) mm

9 Grounding connection (full width bond between counterpoise and reference ground plane)

10 High-quality coaxial cable e.g. double-shielded (50 Ω)

11 Bulkhead connector

12 Measuring instrument

13 RF absorber material

14 Antenna matching unit (the preferred location is below the counterpoise; if above the counterpoise then the base of the antenna rod shall be at the height of the reference ground plane)

15 Stimulation and monitoring system

16 Fibre optic feed through

17 Optical fibres

Figure 15 – Example of test setup – Rod antenna

Dimensions in millimetres – not to scale

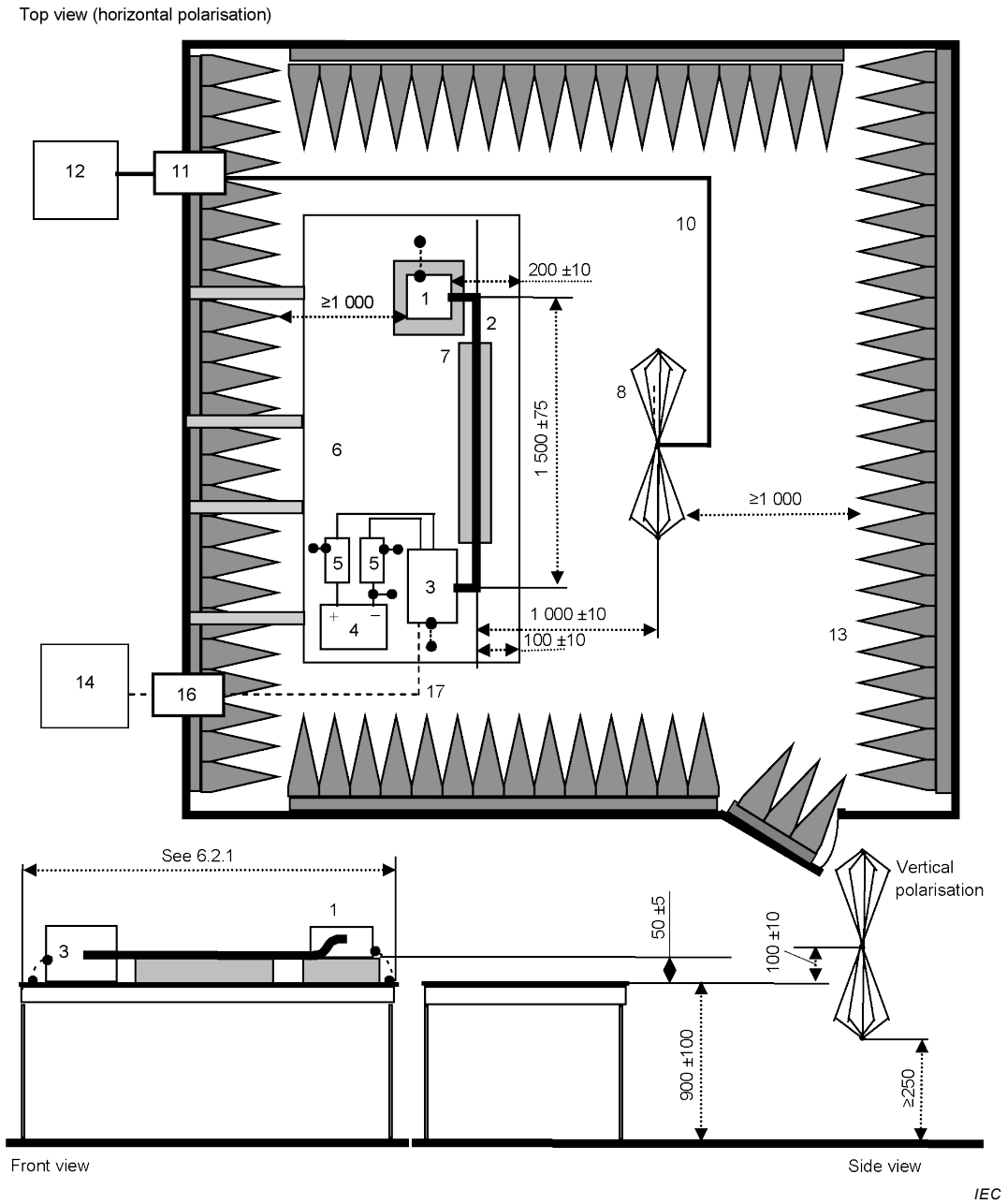

Key

1 EUT (grounded locally if required in test plan)

2 Test harness

3 Load simulator (placement and ground connection according to 6.5.2.6)

4 Power supply (location optional)

5 Artificial network (AN)

6 Reference ground plane (bonded to shielded enclosure)

7 Low relative permittivity support ($\varepsilon_r \leq 1{,}4$)

8 Biconical antenna (no part of the antenna closer than 700 mm to the wiring harness or EUT)

10 High-quality coaxial cable, e.g. double-shielded (50 Ω)

11 Bulkhead connector

12 Measuring instrument

13 RF absorber material

14 Stimulation and monitoring system

16 Fibre optic feed through

17 Optical fibres

Figure 16 – Example of test setup – Biconical antenna

Dimensions in millimetres – not to scale

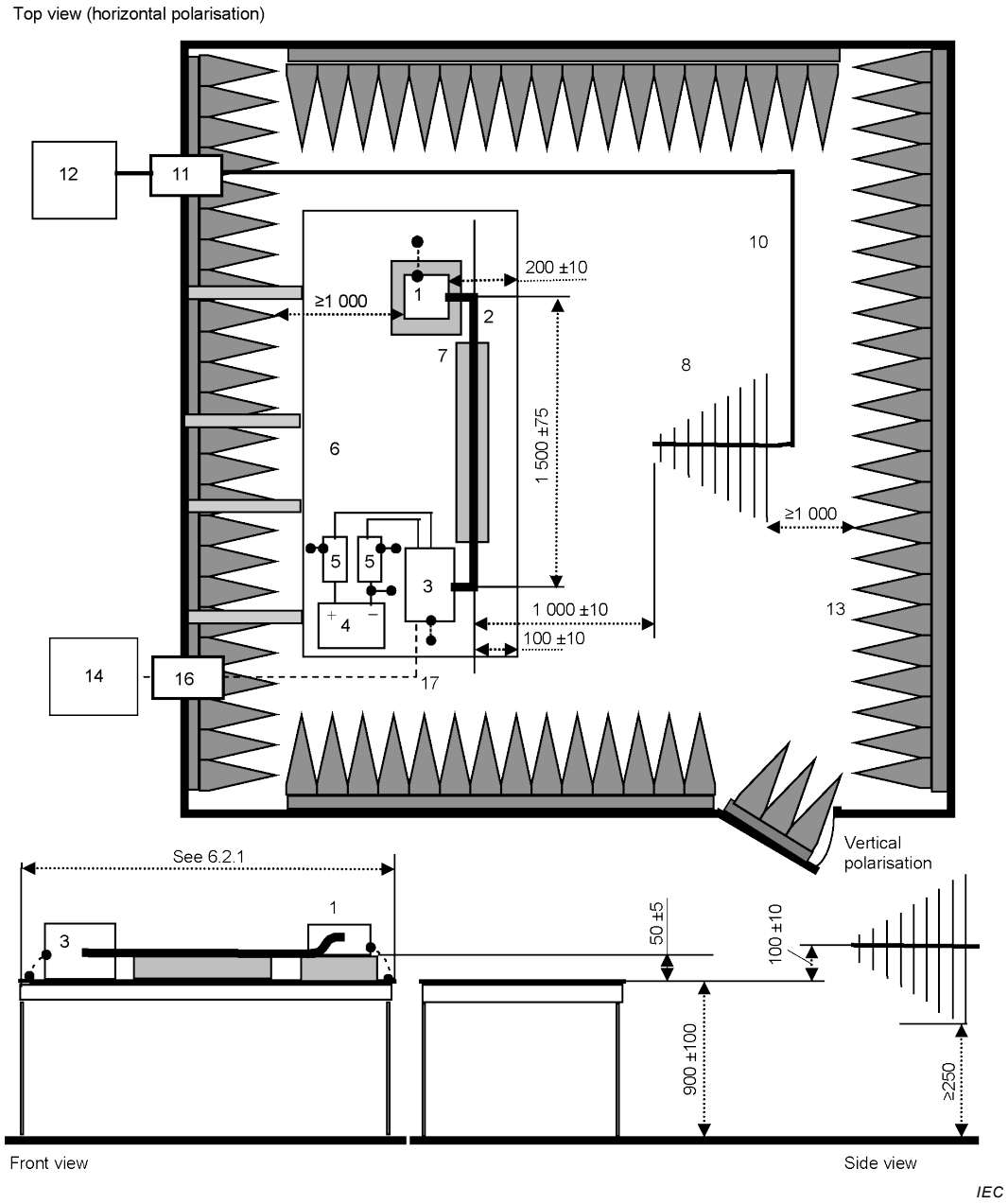

Key

1 EUT (grounded locally if required in test plan)

2 Test harness

3 Load simulator (placement and ground connection according to 6.5.2.6)

4 Power supply (location optional)

5 Artificial network (AN)

6 Reference ground plane (bonded to shielded enclosure)

7 Low relative permittivity support ($\varepsilon_r \leq 1{,}4$)

8 Log-periodic antenna

10 High-quality coaxial cable e.g. double-shielded (50 Ω)

11 Bulkhead connector

12 Measuring instrument

13 RF absorber material

14 Stimulation and monitoring system

16 Fibre optic feed through

17 Optical fibres

Figure 17 – Example of test setup – Log-periodic antenna

Dimensions in millimetres – not to scale

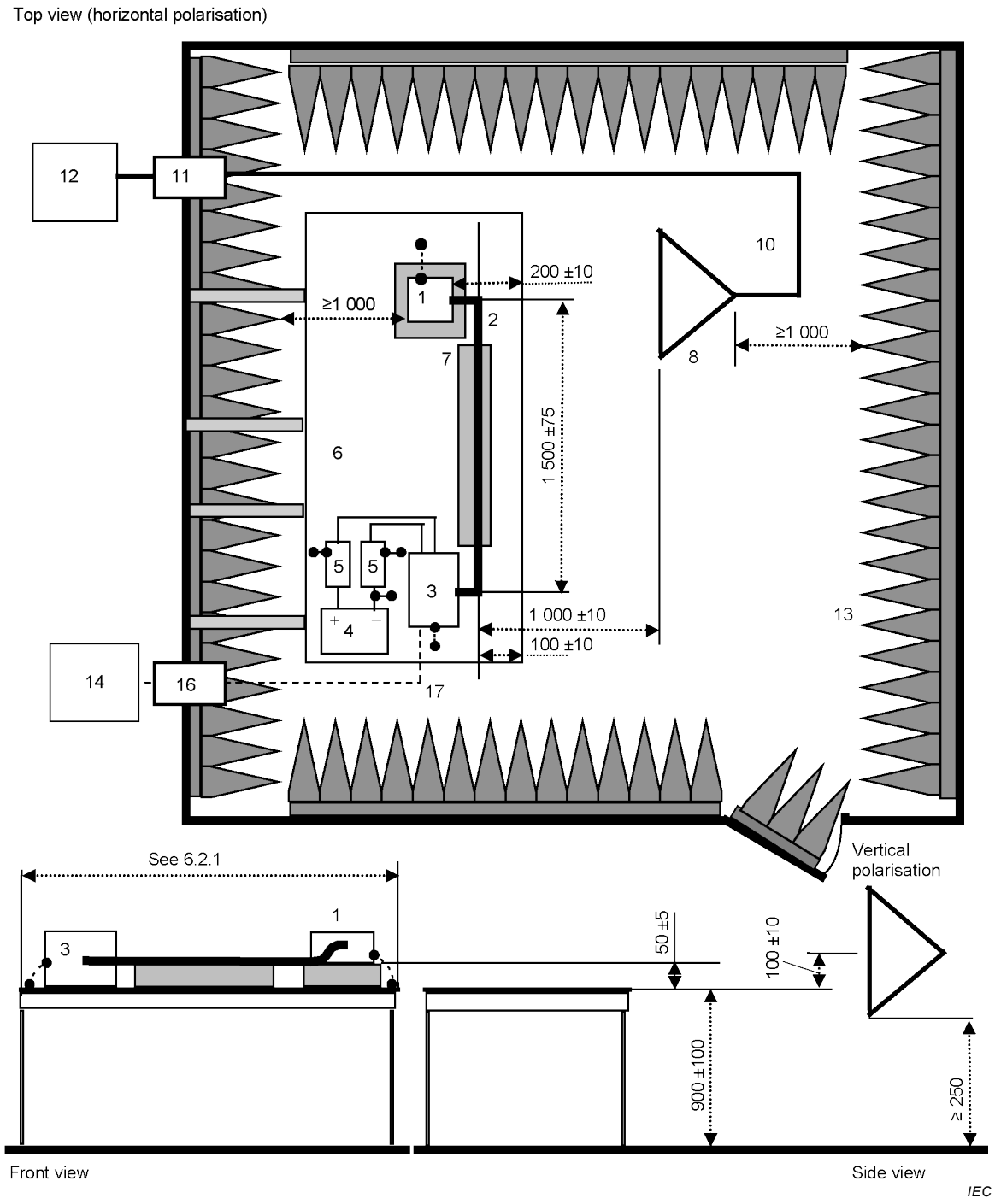

Key

1 EUT (grounded locally if required in test plan)
2 Test harness
3 Load simulator (placement and ground connection according to 6.5.2.6)
4 Power supply (location optional)
5 Artificial network (AN)
6 Reference ground plane (bonded to shielded enclosure)
7 Low relative permittivity support ($\varepsilon_r \leq 1{,}4$)
8 Horn antenna
10 High-quality coaxial cable e.g. double-shielded (50 Ω)
11 Bulkhead connector
12 Measuring instrument
13 RF absorber material
14 Stimulation and monitoring system
16 Fibre optic feed through
17 Optical fibres

Figure 18 – Example of test setup – Above 1 GHz

6.5.4 Limits for radiated disturbances from components/modules – ALSE method

The level class to be used (as a function of the frequency band) shall be agreed upon between the vehicle manufacturer and the component supplier.

It is recommended for acceptable radio reception in a vehicle that the radiated noise should not exceed the values shown in Table 7, peak and average or quasi-peak and average limits, respectively. Since the mounting location, vehicle body construction and harness design can affect the coupling of radio disturbances to the on-board radio, multiple limit levels are defined. For the GPS band a specific limit characteristic is recommended. This is shown in Figure 19.

Table 7 – Examples of limits for radiated disturbances – ALSE method

Service / Band	Frequency MHz	Levels in dB(μV/m)														
		Class 5			Class 4			Class 3			Class 2			Class 1		
		Peak	Quasipeak	Average	Peak	Quasipeak	Average	Peak	Quasipeak	Average	Peak	Quasipeak	Average	Peak	Quasipeak	Average
BROADCAST																
LW	0,15 to 0,30	46	33	26	56	43	36	66	53	46	76	63	56	86	73	66
MW	0,53 to 1,8	40	27	20	48	35	28	56	43	36	64	51	44	72	59	52
SW	5,9 to 6,2	40	27	20	46	33	26	52	39	32	58	45	38	64	51	44
FM	76 to 108	38	25	18	44	31	24	50	37	30	56	43	36	62	49	42
TV Band I	41 to 88	28	–	18	34	–	24	40	–	30	46	–	36	52	–	42
TV Band III	174 to 230	32	–	22	38	–	28	44	–	34	50	–	40	56	–	46
DAB III	171 to 245	26	–	16	32	–	22	38	–	28	44	–	34	50	–	40
TV Band IV	468 to 944	41	–	31	47	–	37	53	–	43	59	–	49	65	–	55
DTTV	470 to 770	45	–	35	51	–	41	57	–	47	63	–	53	69	–	59
DAB L Band	1 447 to 1 494	28	–	18	34	–	24	40	–	30	46	–	36	52	–	42
SDARS	2 320 to 2 345	34	–	24	40	–	30	46	–	36	52	–	42	58	–	48
MOBILE SERVICES																
CB	26 to 28	40	27	20	46	33	26	52	39	32	58	45	38	64	51	44
VHF	30 to 54	40	27	20	46	33	26	52	39	32	58	45	38	64	51	44
VHF	68 to 87	35	22	15	41	28	21	47	34	27	53	40	33	59	46	39
VHF	142 to 175	35	22	15	41	28	21	47	34	27	53	40	33	59	46	39
Analogue UHF	380 to 512	38	25	18	44	31	24	50	37	30	56	43	36	62	49	42
RKE	300 to 330	32	–	18	38	–	24	44	–	30	50	–	36	56	–	42
RKE	420 to 450	32	–	18	38	–	24	44	–	30	50	–	36	56	–	42
Analogue UHF	820 to 960	44	31	24	50	37	30	56	43	36	62	49	42	68	55	48
GSM 800	860 to 895	44	–	24	50	–	30	56	–	36	62	–	42	68	–	48
EGSM/GSM 900	925 to 960	44	–	24	50	–	30	56	–	36	62	–	42	68	–	48
GPS L1 civil	1 567 to 1 583	–	–	10	–	–	16	–	–	22	–	–	28	–	–	34
GLONASS L1	1 591 to 1 616	–	–	10	–	–	16	–	–	22	–	–	28	–	–	34
GSM 1800 (PCN)	1 803 to 1 882	44	–	24	50	–	30	56	–	36	62	–	42	68	–	48
GSM 1900	1 850 to 1 990	44	–	24	50	–	30	56	–	36	62	–	42	68	–	48
3G / IMT 2000	1 900 to 1 992	44	–	24	50	–	30	56	–	36	62	–	42	68	–	48
3G / IMT 2000	2 010 to 2 025	44	–	24	50	–	30	56	–	36	62	–	42	68	–	48
3G / IMT 2000	2 180 to 2 172	44	–	24	50	–	30	56	–	36	62	–	42	68	–	48
Bluetooth/802.11	2 400 to 2 500	44	–	24	50	–	30	56	–	36	62	–	42	68	–	48

a) All values listed in this table are valid for the bandwidths in Table 1 and Table 2. If measurements have to be performed with different bandwidths than those specified in Table 1 and Table 2 because of noise floor requirements, then applicable limits are defined in the test plan.

b) Where multiple bands use the same limits the user selects the appropriate bands over which to test. When the test plan includes bands that overlap the test plan defines the applicable limit.

c) The values given in the table apply to the 1 574,42 MHz to 1 576,42 MHz frequency range. The limits for the whole GPS L1 frequency range are given in Figure 19a.

d) The values given in the table apply to the 1 597,781 MHz to 1 609,594 MHz frequency range. The limits for the whole GLONASS L1 frequency range are given in Figure 19b.

e) Although the limits for peak, quasi-peak and average detectors are shown, measurements with all three detectors are not required. See Figure 1.

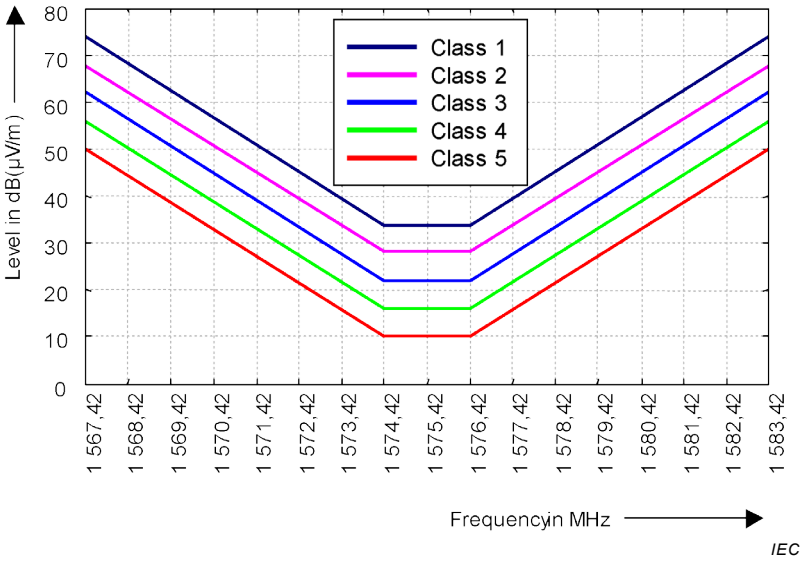

Figure 19a – GPS band 1 567,42 MHz to 1 583,42 MHz

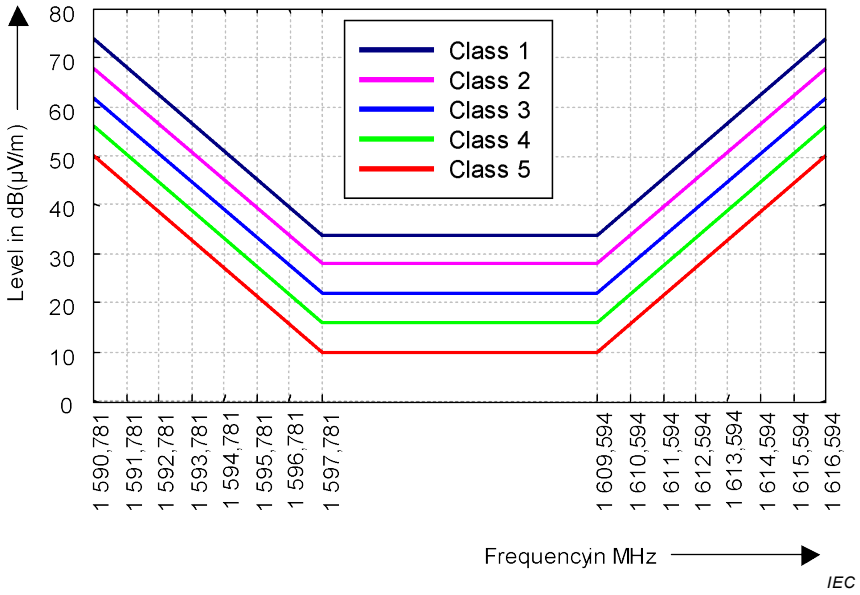

Figure 19b – GLONASS band 1 590,781 MHz to 1 616,594 MHz

Figure 19 – Example of average limit for radiated disturbances from components

6.6 Radiated emissions from components/modules – TEM cell method

Refer to Annex F.

6.7 Radiated emissions from components/modules – Stripline method

Refer to Annex G.

Annex A
(informative)

Flow chart for checking the applicability of CISPR 25

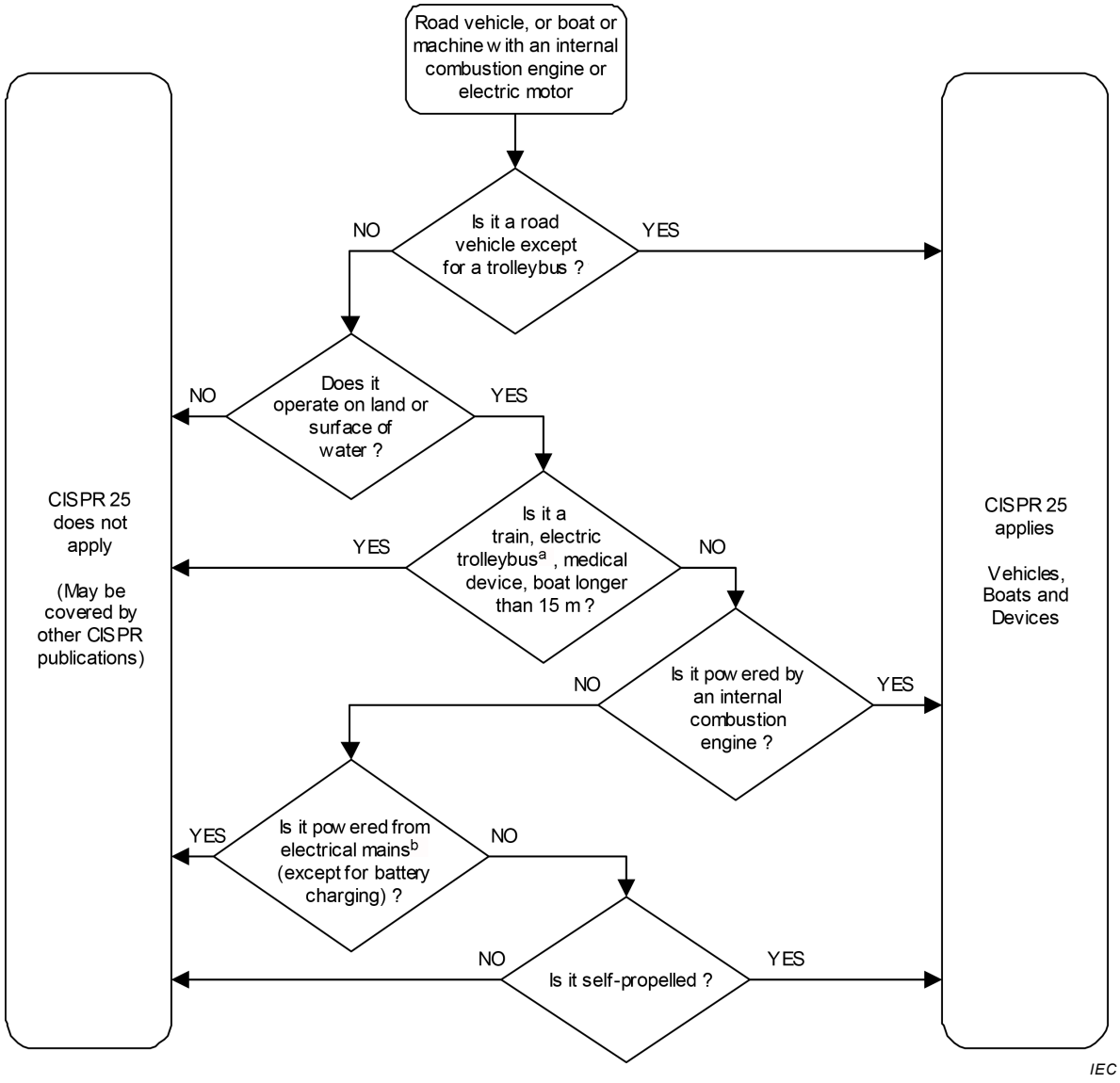

[a] In the case of a dual-mode trolleybus (e.g. propelled by power from either AC/DC mains or an internal combustion engine), the AC/DC mains portion of the vehicle propulsion system shall be excluded from this standard.

[b] Connection to the electrical mains is the work of another CISPR subcommittee.

Figure A.1 – Flow chart for checking the applicability of this standard

Figure A.1 is intended to assist with determining whether a particular product is covered by this standard. In case of conflict between this chart and the scope of this standard, the scope shall take precedence.

Annex B
(normative)

Antenna matching unit – Vehicle test

B.1 Antenna matching unit parameters (150 kHz to 6,2 MHz)

The requirements for the measurement equipment are defined in 5.1.2.1.

B.2 Antenna matching unit – Verification

B.2.1 General

The 10 pF and 60 pF values for the artificial antenna network of Figure B.1 are used to represent a conventional antenna, e.g., 1 m rod, 2 m coaxial. The 60 pF capacitor represents the capacitance of the coaxial cable between the vehicle antenna and the input of the vehicle radio.

NOTE Actual values with on-glass antennas and diversity systems can vary greatly.

B.2.2 Gain measurement

The antenna matching unit and artificial antenna adapter (AAA) shall be measured to determine whether its gain meets the requirements of 5.1.2.1 using the test arrangement shown in Figure B.1.

B.2.3 Test procedure

Using the test arrangement shown in Figure B.1:

1) set the signal generator 40 dB(μV) output level;
2) plot the gain curve for each frequency segment.

NOTE For more precise calibration, the actual values of the components used in the AAA and the input parameters of the matching network can be measured. The actual attenuation for the specific measuring equipment can be calculated and used to obtain the matching network gain with greater precision.

The gain of the antenna matching unit shall be evaluated. This can be obtained either by calculation (with the actual values of the components used in the AAA the input parameters of the antenna matching unit) or by complimentary measurement (using two identical AAA head to tail).

B.3 Impedance measurement

Measurement of the output impedance of the antenna matching unit with the antenna attached shall be made with a vector impedance meter (or equivalent test equipment). The output impedance shall lie within a circle on a Smith chart crossing (100 + j0) Ω, having its centre at (50 + j0) Ω (e.g. VSWR less than 2:1).

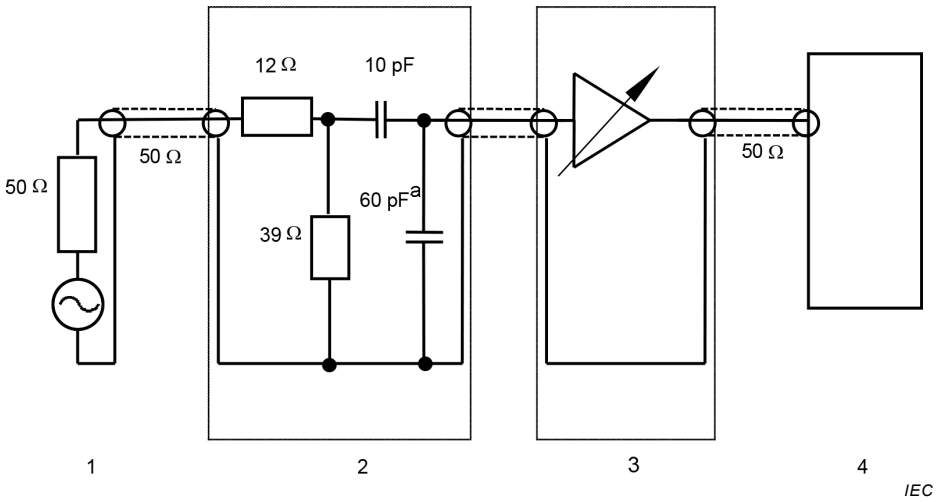

Key

1 Signal generator

2 Artificial antenna adapter

3 Antenna matching unit

4 Measuring instrument

[a] Includes connector capacitance and, if used, cable capacitance

Figure B.1 – Verification setup

Annex C
(informative)

Sheath-current suppressor

C.1 General information

This annex provides information on the proposed performance and verification of a sheath-current suppressor recommended for use when measuring vehicle antenna terminal voltage in the AM broadcast bands (LW, MW, SW). This suppressor electrically isolates the ALSE from the vehicle ground.

C.2 Suppressor construction

The performance curve below (Figure C.1) shows the attenuation of the sheath currents using 20 turns of a coaxial cable around a ferrite toroidal core:

Material:	N30; Al = 5 400 nH
Size:	Toroidal core (58,3 × 40,8 × 17,6) mm
Manufacturer:	TDK EPCOS Order No.: B64290L0040X830
Number of turns:	20 (coaxial cable)

NOTE To increase the attenuation, two sheath-current suppressors can be placed in series or more turns can be added to the single core.

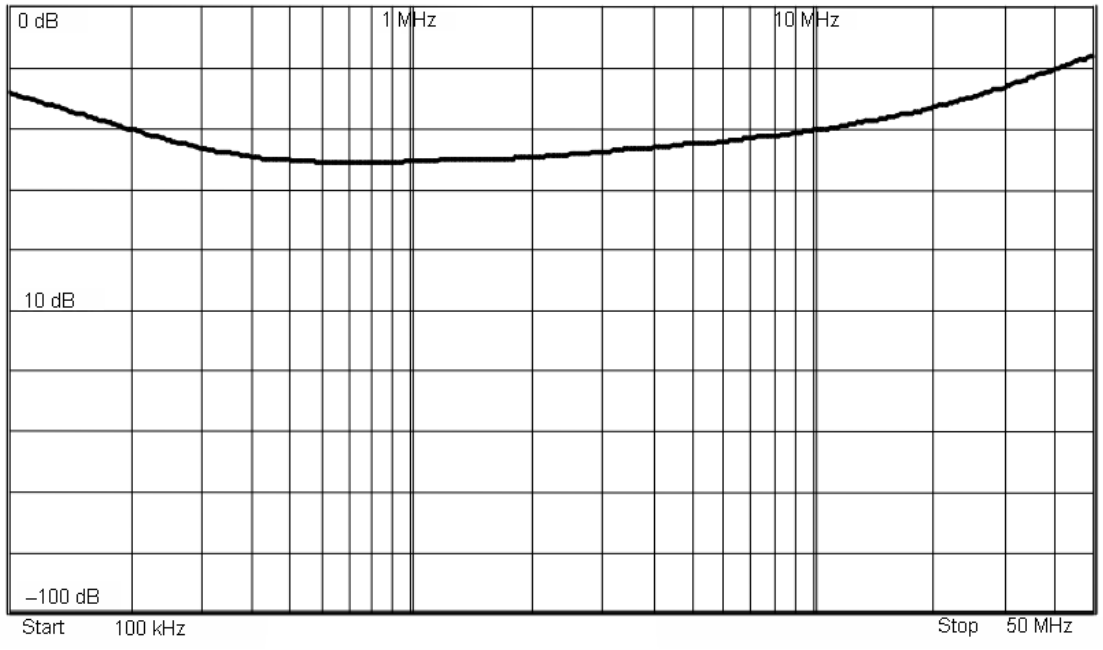

Figure C.1 – Characteristic S_{21} of the ferrite core

Annex D
(informative)

Guidance for the determination of the noise floor of active vehicle antennas in the AM and FM range

Three steps are necessary to determine the noise floor of an active antenna installed in the vehicle:

1) Measurement of the noise floor of the test equipment (measuring receiver plus impedance converter) with coaxial cable impedance termination at the Impedance converter RF-Input in the AM- and FM-Range. ($U_{\text{Equipment noise}}$) (Test setup, see Figure D.1).
2) Measurement of the noise floor of the active vehicle antenna including the noise floor of the test equipment. ($U_{\text{Equipment noise plus antenna noise}}$)(Test setup, see Figure D.2).
3) Calculation of the active antenna noise floor with Formula (D.1) (all terms in μV):

$$U_{\text{Antenna noise}} = \sqrt{U^2_{\text{Equipment noise plus antenna noise}} - U^2_{\text{Equipment noise}}} \quad \text{(D.1)}$$

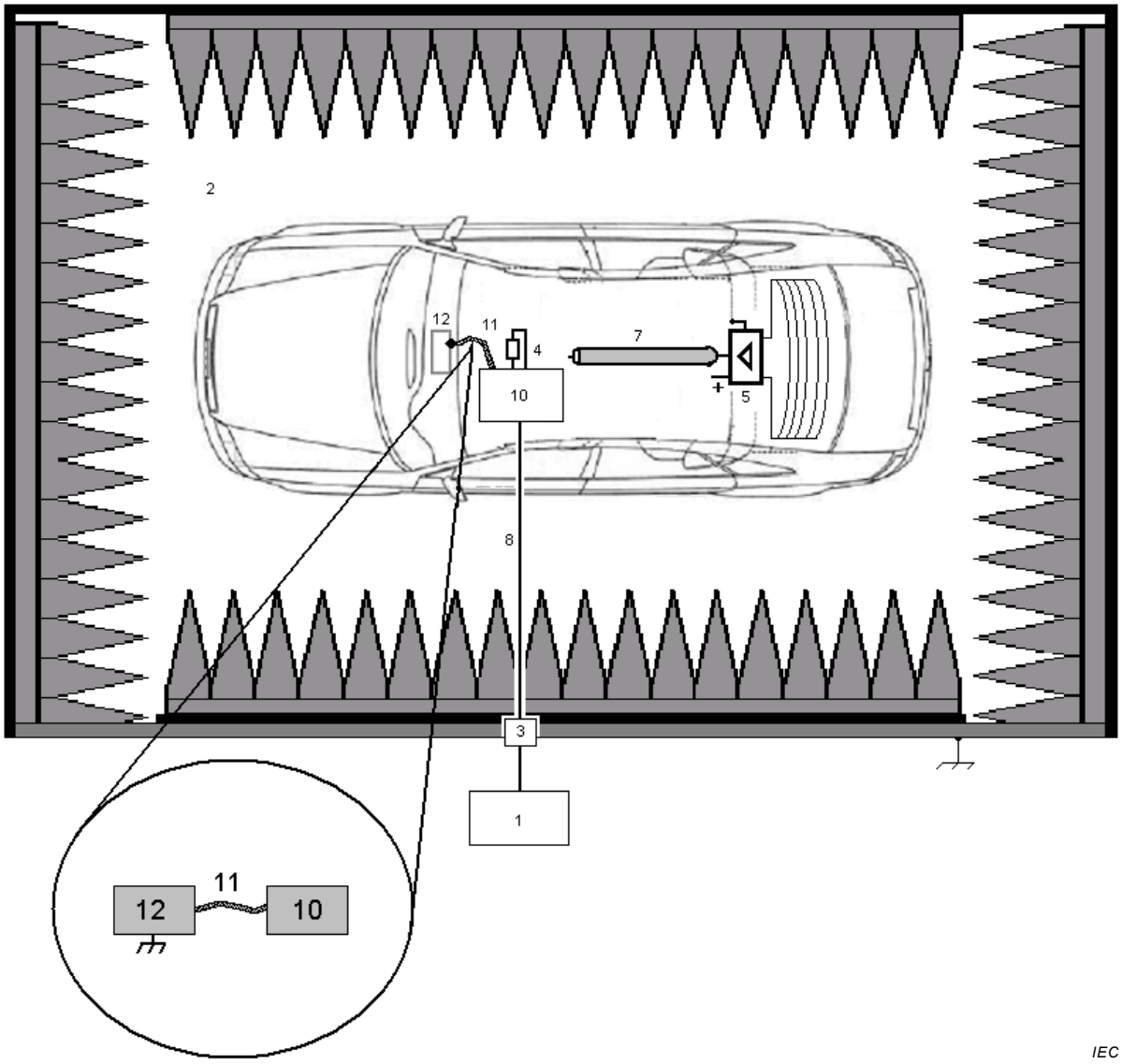

Key

1 Measuring instrument

2 ALSE

3 Bulkhead connector

4 Resistor according to coaxial cable impedance

5 Vehicle antenna amplifier

–

7 Antenna coaxial cable

8 High-quality double-shielded coaxial cable (50 Ω)

–

10 Impedance matching unit

11 Short connection to the housing of the on-board radio

12 Housing of on-board radio

Figure D.1 – Vehicle test setup for equipment noise measurement in the AM/FM range

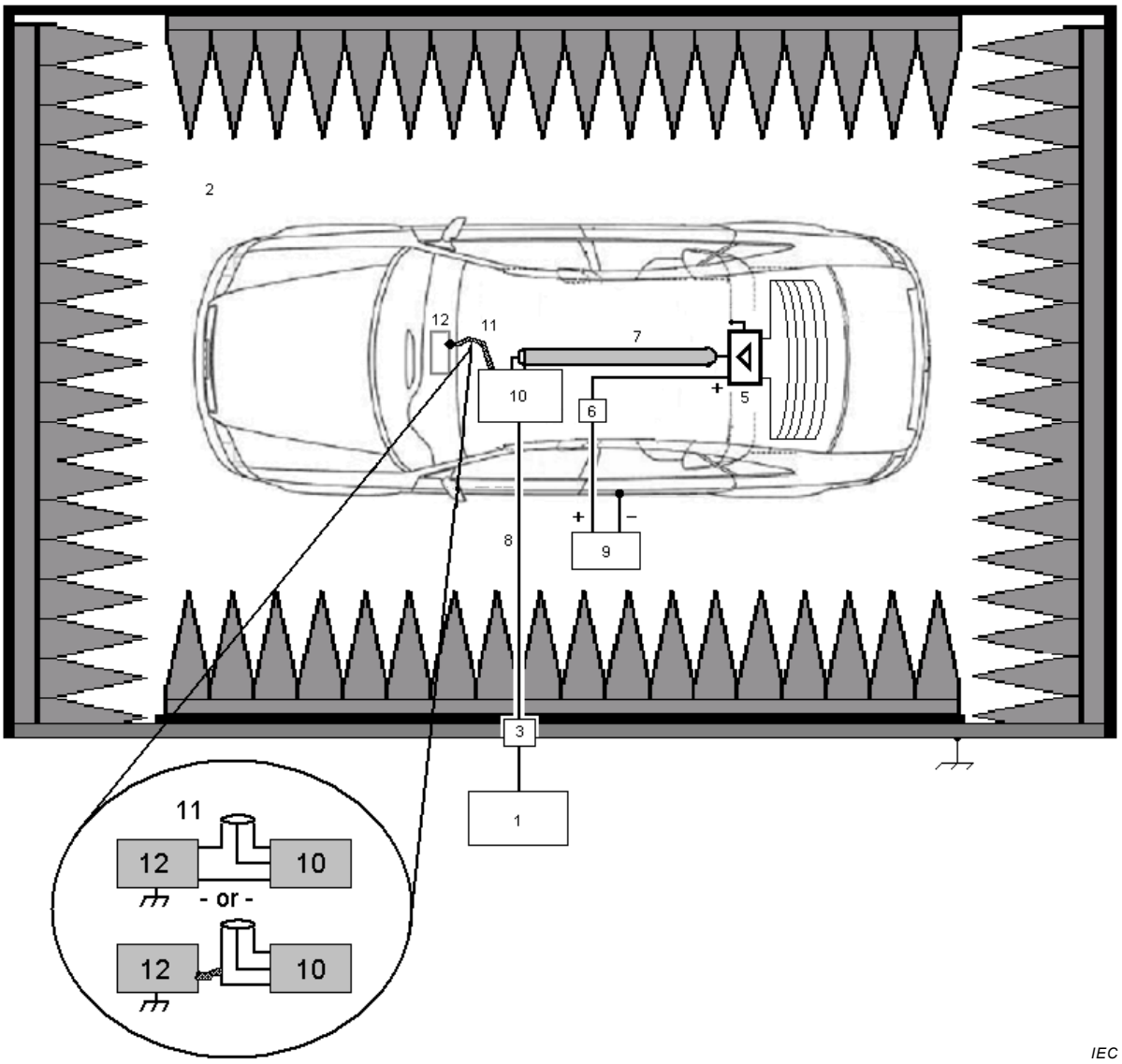

Key

1 Measuring instrument
2 ALSE
3 Bulkhead connector
-
5 Vehicle antenna amplifier
6 Antenna amplifier power plug
7 Antenna coaxial cable
8 High-quality coaxial cable e.g. double-shielded (50 Ω)
9 External 12 V battery
10 Impedance matching unit
11 Modified coaxial "T" connector or short connection to the housing of the on-board radio
12 Housing of on-board radio

Figure D.2 – Vehicle test setup for antenna noise measurement in the AM/FM range

Annex E
(normative)

Artificial networks (AN), artificial mains networks (AMN) and asymmetric artificial networks (AAN)

E.1 General

Currently different types of power supplies and power supply cabling are used for a component powered by low voltage (LV) and/or high voltage (HV) and/or connected to the power grid (AC power mains, DC power supply). Therefore, it is necessary to use networks which provide specific load impedance and isolate the component from the power supply.

– Artificial networks (AN): used for DC power supplies.
– Artificial mains networks (AMN): used only for AC power mains.
– Asymmetric artificial network (AAN): used only for communication/signal lines.

E.2 Artificial networks (AN)

E.2.1 Component powered by LV

For a component powered by LV, a 5 μH / 50 Ω AN as defined in Figure E.1 shall be used.

The AN(s) shall be mounted directly on the ground plane. The grounding connection of the AN(s) shall be bonded to the ground plane.

Measurement ports of AN(s) shall be terminated with a 50 Ω load.

The AN impedance Z_{PB} (tolerance ± 20 %) in the measurement frequency range of 0,1 MHz to 100 MHz is specified in Table E.1 and shown in Figure E.2. It is measured between the terminals P and B (of Figure E.1) with a 50 Ω load on the measurement port with terminals A and B (of Figure E.1) short circuited.

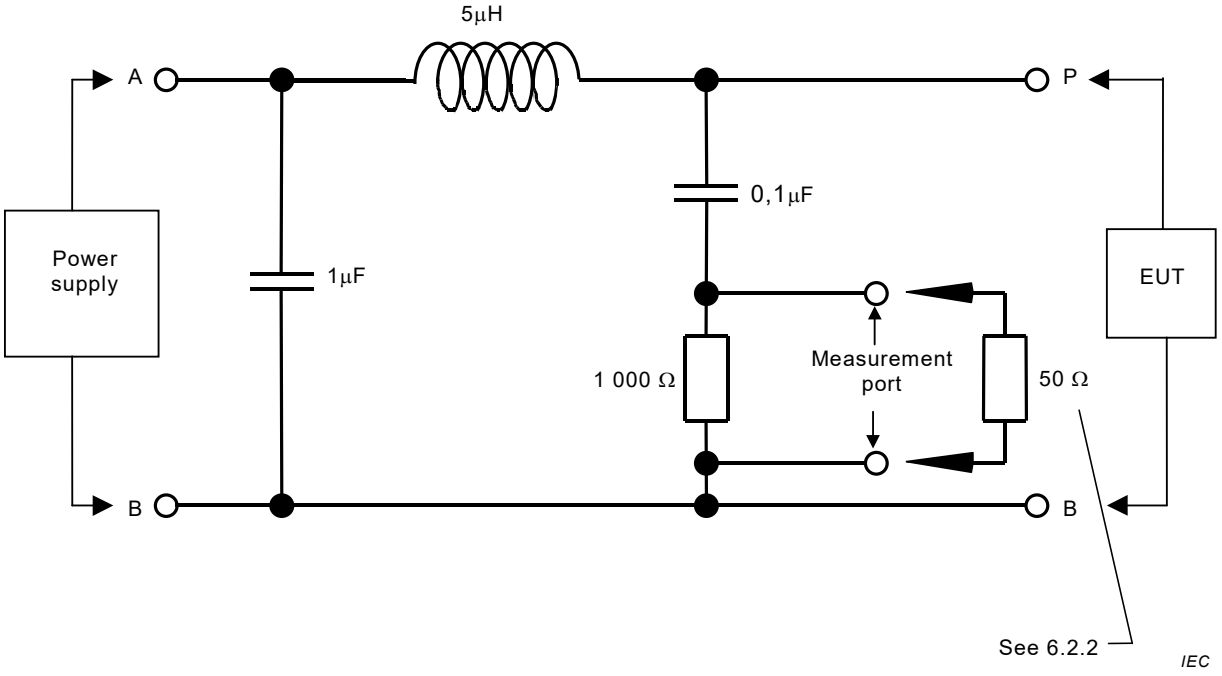

Figure E.1 – Example of 5 μH AN schematic

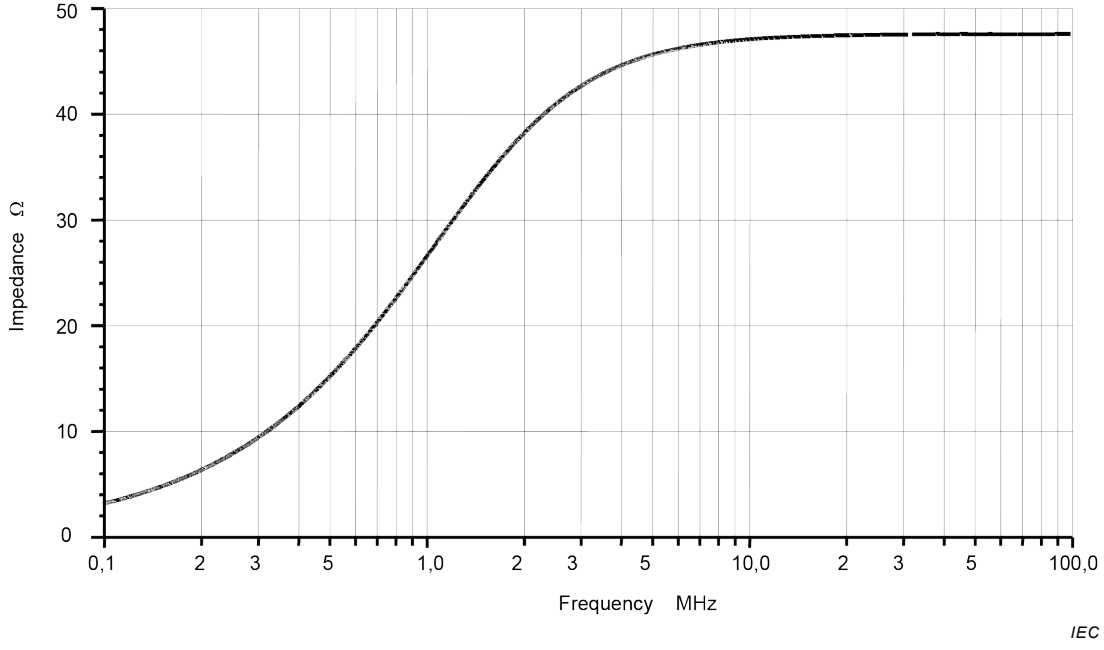

Figure E.2 – Characteristics of the AN impedance Z_{PB}

Table E.1 – Magnitude of the AN impedance Z_{PB}

Frequency MHz	Magnitude of the impedance		
	Nominal value Ω	Lower tolerance Ω	Upper tolerance Ω
0,10	3,20	2,56	3,84
0,15	4,79	3,83	5,75
0,20	6,37	5,09	7,64
0,30	9,45	7,56	11,34
0,40	12,41	9,93	14,89
0,50	15,23	12,18	18,27
0,70	20,34	16,27	24,41
1,00	26,64	21,31	31,97
1,50	33,88	27,10	40,65
2,00	38,26	30,61	45,92
2,50	40,97	32,77	49,16
3,00	42,70	34,16	51,24
4,00	44,65	35,72	53,59
5,00	45,66	36,53	54,79
7,00	46,59	37,27	55,90
10,00	47,10	37,68	56,53
15,00	47,39	37,91	56,87
20,00	47,49	37,99	56,99
30,00	47,56	38,05	57,07
50,00	47,60	38,08	57,12
100,00	47,61	38,09	57,14

E.2.2 Component powered by HV

For a component powered by HV, a 5 μH / 50 Ω HV-AN as defined in Figure E.3 shall be used.

The HV-AN(s) shall be mounted directly on the ground plane. The grounding connection of the HV-AN(s) shall be bonded to the ground plane.

Measurement ports of HV-AN(s) shall be terminated with a 50 Ω load.

The HV-AN impedance Z_{PB} (tolerance ± 20 %) in the measurement frequency range of 0,1 MHz to 100 MHz is shown in Figure E.2. See Table E.1 for the nominal impedance and upper/lower tolerances in tabular form. It is measured between the EUT HV and ground terminals (of Figure E.3) with a 50 Ω load on the measurement port and with the supply line HV and ground terminals short circuited.

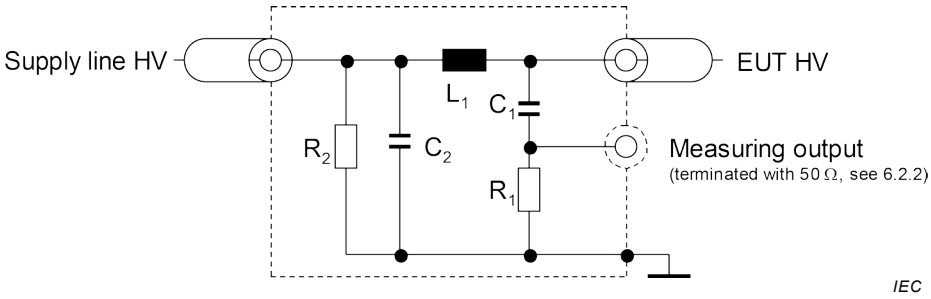

Key

L_1: 5 µH

C_1: 0,1 µF

C_2: 0,1 µF (default value)

R_1: 1 kΩ

R_2: 1 MΩ (discharging C_2 to <50 V_{dc} within 60 s)

Figure E.3 – Example of 5 µH HV AN schematic

If unshielded HV ANs are used in a single shielded box, then there shall be an inner shield between the HV ANs as described in Figure E.4.

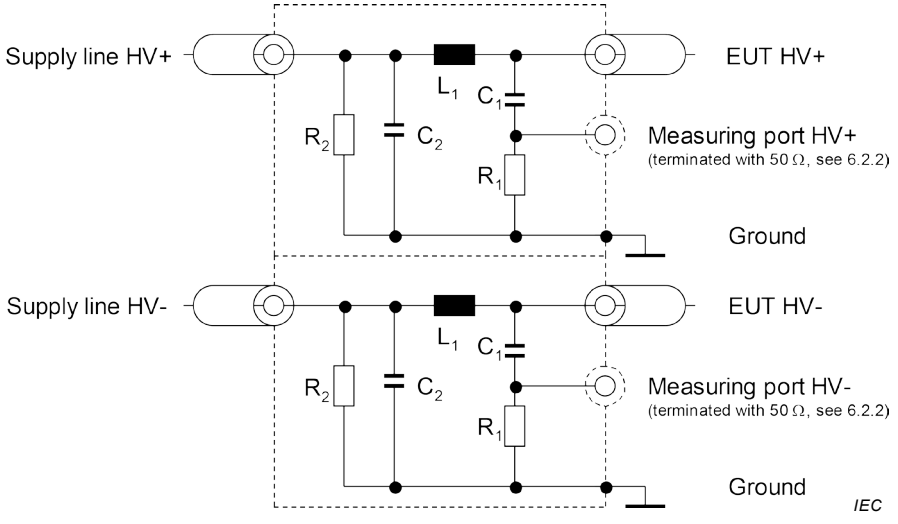

Key

L_1: 5 µH

C_1: 0,1 µF

C_2: 0,1 µF (default value)

R_1: 1 kΩ

R_2: 1 MΩ (discharging C_2 to < 50 V_{dc} within 60 s)

Figure E.4 – Example of 5 µH HV AN combination in a single shielded box

An optional impedance matching network may be used to simulate common mode / differential mode impedance seen by the EUT plugged on HV power supply (see Figure E.5).

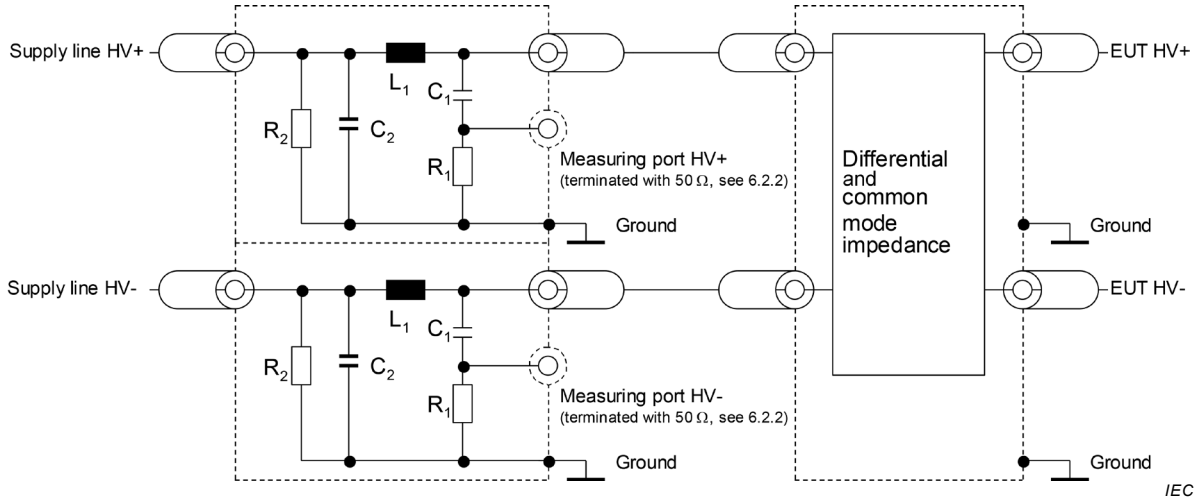

Key

L_1: 5 μH

C_1: 0,1 μF

C_2: 0,1 μF (default value)

R_1: 1 kΩ

R_2: 1 MΩ (discharging C_2 to < 50 V_{dc} within 60 s)

Figure E.5 – Impedance matching network attached between HV ANs and EUT

E.2.3 Component involved in charging mode connected to DC power mains

For a component involved in charging mode (e.g. charger) connected to a DC power mains, a 5 μH / 50 Ω-DC HV-AN as defined in E.2.2 shall be used.

E.2.4 Vehicle in charging mode connected to DC power mains

For a vehicle in charging mode connected to a DC power mains, a 5 μH / 50 Ω DC HV-AN as defined in E.2.2 shall be used.

E.3 Artificial mains networks (AMN)

E.3.1 Component AMN

For a component involved in charging mode (e.g. charger) connected to AC power mains, a 50 μH / 50 Ω AMN as defined in CISPR 16-1-2:2014, 4.3 shall be used.

The AMN(s) shall be mounted directly on the ground plane. The grounding connection of the AMN(s) shall be bonded to the ground plane.

Measurement ports of AMN(s) shall be terminated with a 50 Ω load.

E.3.2 Vehicle in charging mode connected to AC power mains

For a vehicle in charging mode connected to AC power mains, a 50 μH / 50 Ω AMN as defined in E.3.1 shall be used.

E.4 Asymmetric artificial network (AAN)

E.4.1 General

Currently different types of communication system and communication cabling are used for the communication between charging station and component (e.g. charger) or vehicle. Therefore, a distinction between some specific cabling/operation types is necessary.

The AAN(s) shall be mounted directly on the ground plane. The grounding connection of the AAN(s)) shall be bonded to the ground plane.

Measurement ports of AAN(s) shall be terminated with a 50 Ω load.

NOTE This AAN is not intended for any conducted emission measurement if the communication lines are limited to be used between vehicle and charging station, but only to ensure a controlled impedance of the communication lines seen from the component or vehicle side.

E.4.2 Symmetric communication lines

An asymmetric artificial network (AAN) to be connected between component (e.g. charger) or vehicle and charging station or any associated equipment (AE) used to simulate communication is defined in CISPR 16-1-2:2014, Clause E.2 (T network circuit) (see example in Figure E.6).

The AAN has a common mode impedance of 150 Ω. The impedance Z_{cat} adjusts the symmetry of the cabling and attached periphery typically expressed as longitudinal conversion loss (LCL). The value of LCL should be predetermined by measurements or be defined by the manufacturer of the charging station/charging cable. The selected value for LCL and its origin shall be stated in the test report.

NOTE 1 For some networks (e.g. CAN) this AAN cannot be used for conducted emission and/or radiated emission measurements on these lines. Alternative methods (current and voltage measurements) are used.

NOTE 2 AAN may be applicable to CAN lines but if AAN shown in Figure E.6 induces malfunctions of communication, it may adapt (optimize) these values to ensure proper communication.

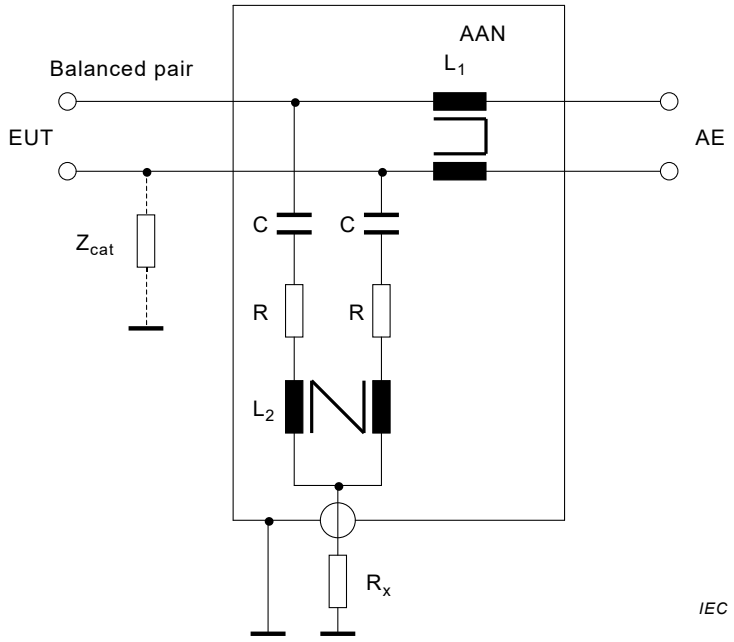

Key

C = 4,7 μF

R = 200 Ω

L_1 = 2 × 38 mH

L_2 = 2 × 38 mH

R_x = 50 Ω

AE = Associated equipment

EUT = Equipment under test

Figure E.6 – Example of an AAN for symmetric communication lines

E.4.3 PLC on power lines

If an original charging station can be used for the test, it might be not necessary to add any AAN for PLC communication.

If PLC communication cannot be ensured with original charging station and AMN, or shall be simulated with use of an associated equipment (AE) (e.g. as a PLC modem) instead of an original charging station, it is necessary to add an AAN for PLC communication between PLC modem and the AMN (component or vehicle side) as defined in Figure E.7.

NOTE This AAN is not intended for any conducted emission measurement, but only to ensure adequate decoupling between PLC modem and power mains.

The circuit in Figure E.7 provides a common mode termination by the AN/AMN. Therefore, an attenuator is located between powerline and the PLC modem at the AE side in the circuit for emission tests. This attenuator consists of two resistors in combination with the input/output impedance of the PLC modem. The value of the resistors depends on the design impedance of the PLC modems and the allowed attenuation for the PLC system.

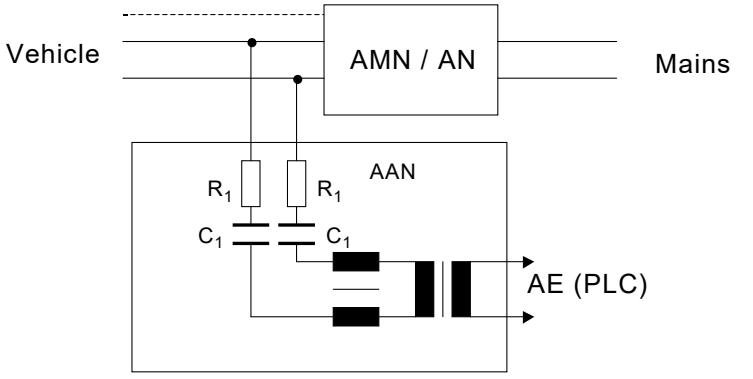

Key

R_1 = 2,5 kΩ

C_1 = 4,7 nF

The value of the resistors depends on the allowed attenuation and the design impedance of the PLC modem (here: 40 dB attenuation, 100 Ω PLC design impedance).

Figure E.7 – Example of AAN circuit of PLC on AC or DC powerlines

E.4.4 PLC (technology) on control pilot

Some communication systems use the control pilot line (versus PE) with a superimposed (high frequency) communication. Typically, the technology developed for powerline communication (PLC) is used for that purpose. On one hand the communication lines are operated unsymmetrically, on the other hand two different communication systems operate on the same line. Therefore a special AAN shall be used as defined in Figure E.8.

It provides a common mode impedance of 150 Ω ± 20 Ω (150 kHz to 30 MHz) on the control pilot line (assuming a design impedance of the modem of 100 Ω). Both types of communications (control pilot, PLC) are separated by the network.

Therefore, typically a communication simulation is used in combination with this network. The attenuator built by the resistors and the design impedance of the PLC modem makes sure that the signal on the charging cable is dominated by the EUT's communication signals rather than the AE PLC modem.

The values of inductance and capacitance in the networks added for PLC on control pilot shown in Figure E.8 shall not induce any malfunction of communication between component (e.g. charger) or vehicle and AE or charging station. It may therefore be necessary to adapt these values to ensure proper communication.

NOTE This AAN is not intended for any conducted emission measurement, but only to ensure a controlled impedance of the pilot line (and PLC) seen from the component or vehicle side.

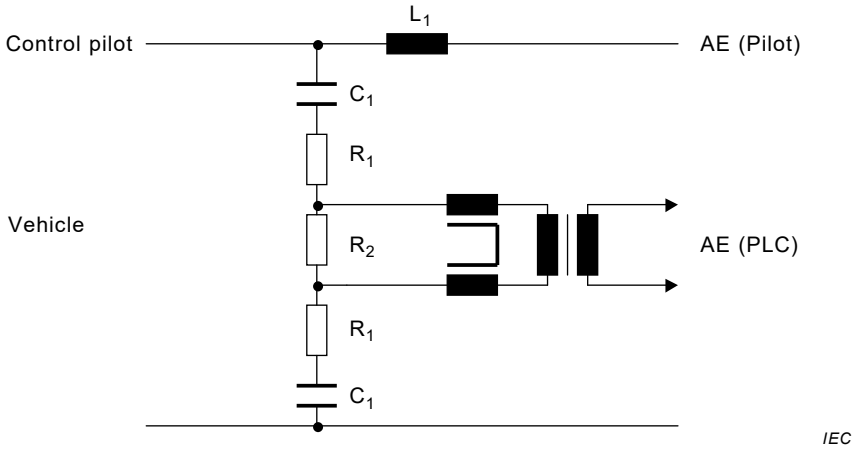

Key

L_1 = 100 μH

C_1 = 2,2 nF

R_1 = 39 Ω

R_2 = 270 Ω

The values of the three resistors depend on the design impedance of the PLC modem connected at AE side. The values given in the schematic are valid for a design impedance of 100 Ω.

Figure E.8 – Example of an AAN circuit for PLC on pilot line

Annex F
(informative)

Radiated emissions from components/modules – TEM cell method

F.1 General

Measurements of radiated field strength shall be made in a shielded enclosure to eliminate the high levels of extraneous disturbance from electrical equipment and radiated fields from nearby broadcast and other radio transmitters. The TEM cell works as a shielded enclosure. An example of a TEM (transverse electromagnetic mode) cell is shown in Figure F.1. Information relating to the size and construction of a TEM cell for component measurement is given in Clause F.5.

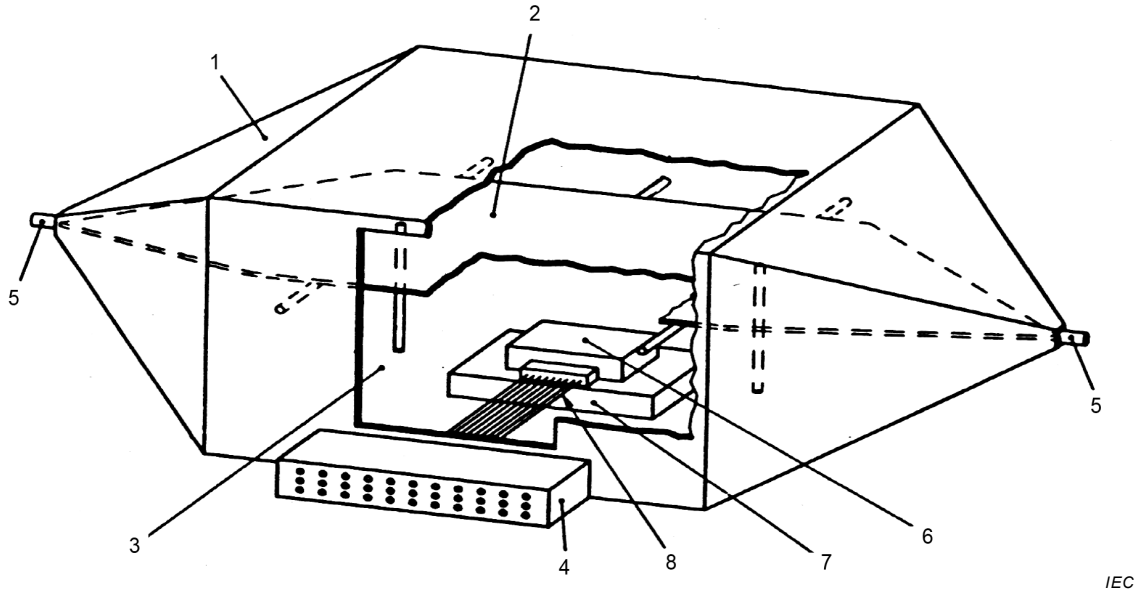

Key

1 Outer shield

2 Septum (inner conductor)

3 Access door

4 Connector panel (optional)

5 Coaxial connectors

6 EUT

7 Low relative permittivity support ($\varepsilon_r \leq 1{,}4$)

8 Artificial harness

The connectors on the connector panel should be coaxial RF connectors if the RF boundary extends outside of the TEM cell

Figure F.1 – TEM cell (example)

The upper frequency limit of this test method is a direct function of the TEM cell dimensions, the dimensions of the components/module (arrangement included), and the RF filter characteristic. Measurements shall not be made near the TEM cell resonance frequencies.

A TEM cell is recommended for testing automotive electronic systems in the frequency range from 150 kHz to 200 MHz. The TEM cells boxed in Table F.2, are typical of those used in automotive work.

In order to achieve reproducible test results the EUT and the test harness shall be placed in the TEM cell in the same position for each repeated measurement.

For the purpose of this test, the septum of the TEM cell functions in a similar way to a receiving antenna.

F.2 Test setup

F.2.1 Setup with major field emission from the wiring harness

The TEM cell shall have a connector panel connected as close as possible to a plug connector (see Figure F.2 and Figure F.3).

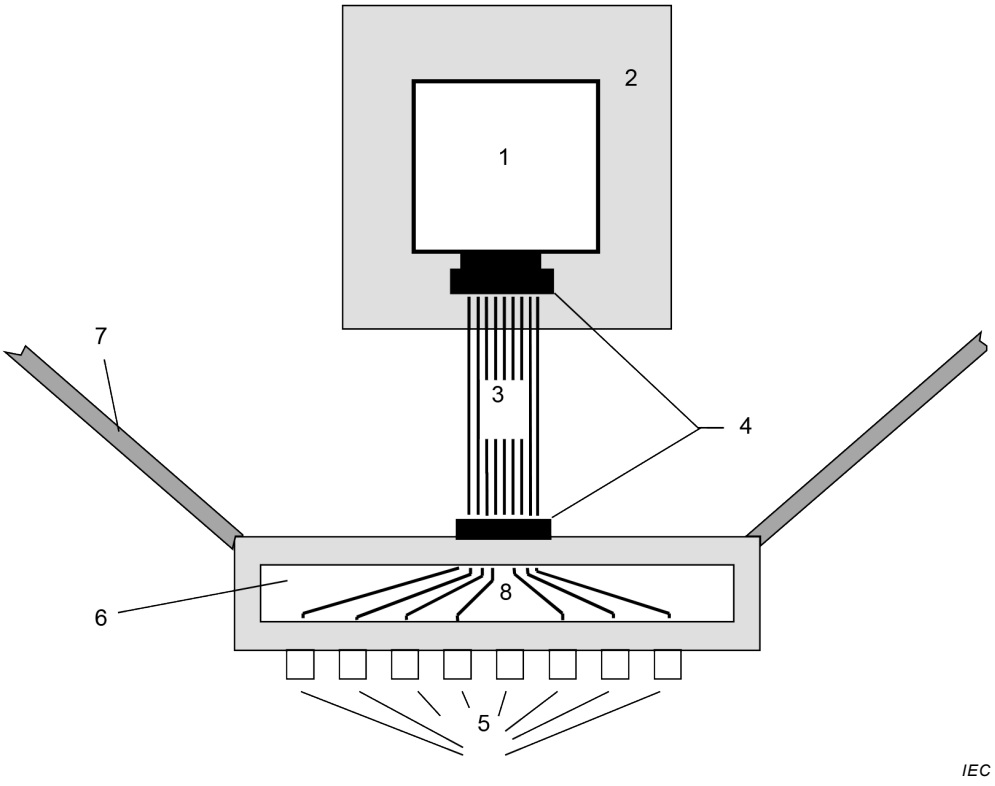

Key

1 EUT
2 Low relative permittivity support ($\varepsilon_r \leq 1{,}4$)
3 Printed circuit board or wiring harness
4 Connector
5 Coaxial connectors
6 Connector panel (optional)
7 TEM cell wall
8 RF coaxial cables

All leads to the EUT shall pass through an RF boundary. The RF boundary is either at the wall of the TEM cell or extended through RF coaxial cable (8) and coaxial connectors (5). The boundary is terminated by RF-filters which can be connected inside the connector panel (6) or directly outside to the coaxial connectors (5). The cables in the connector panel should be coaxial if the RF-filters are connected to the coaxial connectors (5).

Figure F.2 – Example of arrangement of leads in the TEM cell and to the connector panel

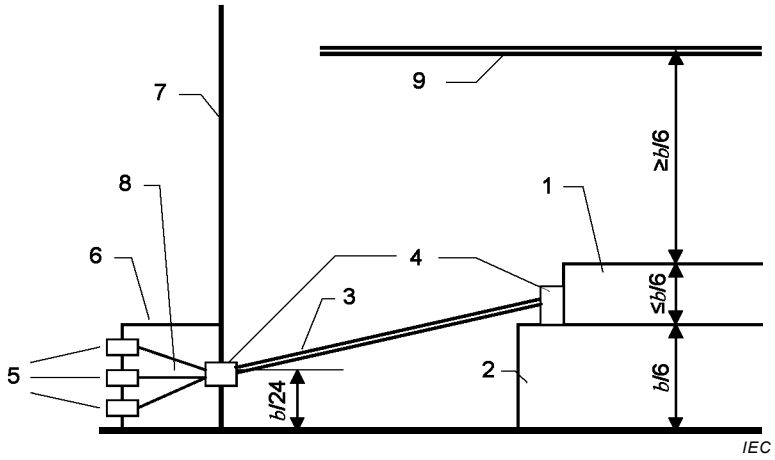

Key

1 EUT

2 Low relative permittivity support ($\varepsilon_r \leq 1{,}4$)

3 Printed circuit board (no ground plane) or wiring harness, not shielded

4 Connector

5 Coaxial connectors

6 Connector panel (optional)

7 TEM cell wall

8 Cables

9 Septum

b is the TEM cell height (see Clause F.5)

The connectors on the connector panel should be coaxial RF connectors if the RF boundary extends outside of the TEM cell.

Figure F.3 – Example of the arrangement of the connectors, the lead frame and the dielectric support

All supply and signal leads from the EUT are directly connected to the artificial harness (e.g. a lead frame). The plugs at the connector panel which are not required shall be sealed so that they are RF-tight.

The connection of the positive power lead shall be through the AN (see 6.2.2), direct at the connector panel.

It is not permitted to ground the EUT directly to the TEM cell floor. The grounding shall be done at the connector panel.

F.2.2 Setup with major field emissions from the EUT

The test setup is similar to the method shown above, except that the leads to the EUT are positioned and shielded to minimise electromagnetic radiation from the leads. This is accomplished by positioning the leads flat across the bottom of the TEM cell and bringing them vertically to the EUT. The use of a sealed battery and shielded wiring in the TEM cell will further reduce the electromagnetic radiation from power and signal leads. To minimise the radiation from the wiring further, shielding foil tape can be applied over the leads.

F.2.3 Power supply and AN

An AN with a coaxial connector will facilitate connection to the TEM cell EUT power connector.

F.2.4 Signal/control line filters

In the TEM cell test method using the coaxial connectors for EUT leads each lead shall pass through a filter which has impedance characteristics similar to that of the AN defined in Annex E.

The attenuation of the filters shall be specified for the whole frequency range of the intended component/module test (see 6.3 to 6.7) according to the requirements shown in Figure F.4. The attenuation shall be more than 40 dB from 30 MHz up to the upper cut-off frequency (f_c), which depends on the intended test method. Figure F.4 shows e.g. an upper cut-off frequency (f_c) of the chosen test method of 400 MHz.

NOTE 1 Other low pass RF filter configurations can be used if the filter characteristics are not applicable to special wanted signals of the EUT's inputs or outputs (e.g. high speed network data interfaces). The filters can be specified in the test plan.

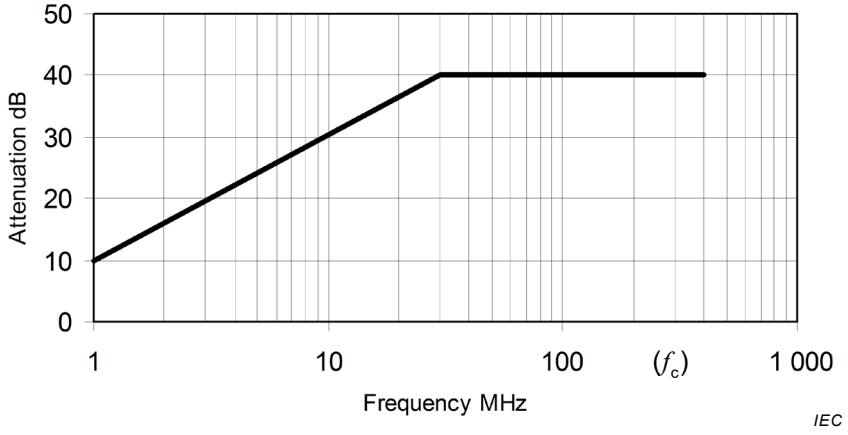

Figure F.4 – Example for the required minimum attenuation of the signal / control line filters

The attenuation of such a filter can be determined by a two-port network analyser measurement ($-s_{21}$). The input and output impedance of the network analyser shall be 50 Ω.

The test setup is shown in Figure F.5.

NOTE 2 Equivalent methods for measuring in a 50 Ω system such as a measuring receiver or equivalent equipment with built-in tracking generator can also be used for the measurement since only the magnitude of the attenuation is to be measured.

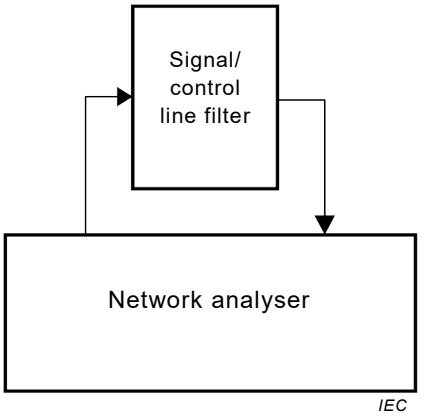

Figure F.5 – Setup for measurement of the filter attenuation

F.3 Test procedure

An example of the TEM cell method test layout is given in Figure F.6. The general arrangement of the EUT, the harness, the filter system at the TEM cell's wall, etc. represent a standardised test condition. Any deviations from the standard test configuration shall be agreed upon prior to testing and recorded in the test report.

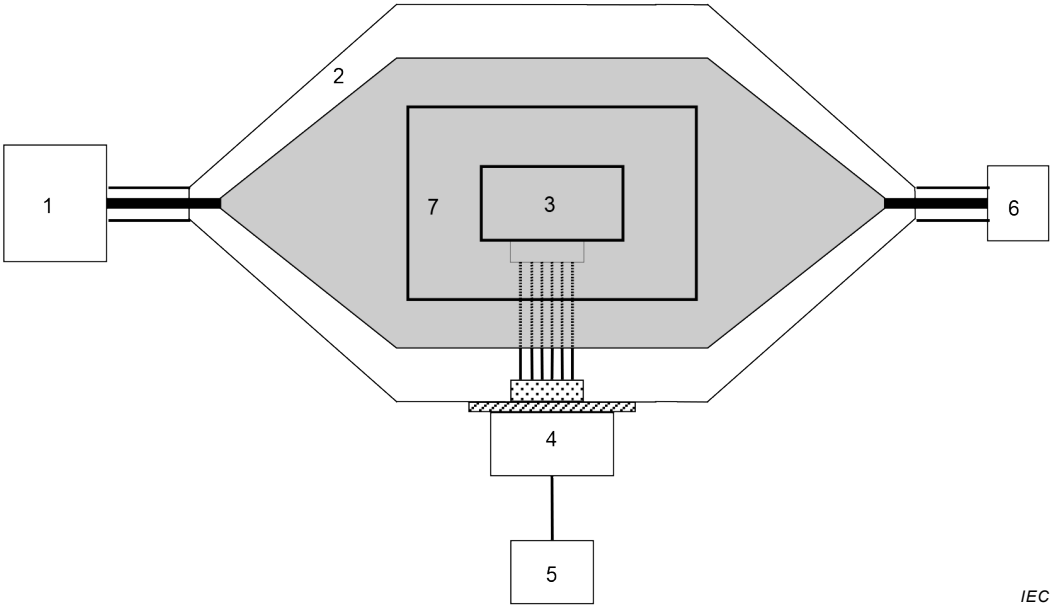

Key

1 Measuring instrument

2 TEM cell

3 EUT

4 AN (see 6.2.2)

5 Power supply

6 50 Ω termination resistor

7 Low relative permittivity support ($\varepsilon_r \leq 1{,}4$)

Figure F.6 – Example of the TEM cell method test setup

The EUT shall be supported $b/6$ (see Figure F.3) above the TEM cell floor by non-conductive, low relative permittivity material ($\varepsilon_r \leq 1{,}4$) in the allowed working region. The length of the artificial harness (e.g. a lead frame) shall be (450 ± 45) mm and positioned as shown in Figure F.2 and Figure F.3.

The wiring arrangement of the artificial harness, the design and the overall height of the EUT's connector constitute electrical coupling loops and dipoles which influence the test results. All connections between the plug and contacts of the EUT's (multipole) connector and the artificial harness shall be as short as possible. Repeat measurements shall be performed using the same arrangement of the artificial harness, the same overall height of the EUT's connector and the same pin assignment on both connectors. Care shall be taken, if the size of the EUT and the allowed working region is nearly the same. In such a case, special care should be taken to define and document the test layout in the test plan.

The EUT shall be installed to operate under typical loading and other conditions in the vehicle in such a way that the maximum emission state occurs. These operating conditions shall be defined in the test plan to ensure that supplier and customer can perform identical tests.

NOTE Different orthogonal orientations of the EUT could lead to different levels of measured electromagnetic energy.

The positive supply line shall have an RF filter at the TEM cell input. The artificial network (AN) of 6.2.2 shall be used as this filter. The AN shall be connected directly to the TEM cell and shall be screened, so that the negative supply line is grounded at the connector panel. The RF sampling port of the AN shall be terminated with a 50 Ω load.

All sensor and actuator leads of the EUT shall be connected to a peripheral interface, which simulates the operation in the vehicle.

To minimise influences of the wiring outside the TEM cell, low pass filters shall be used, which shall be connected directly to the BNC panel. The performance of the filters depends on the frequency range of the EUT's wanted signals. If no other configuration is specified in the test plan the filters shall perform like the artificial network with a 50 Ω impedance as described in Annex E.

To eliminate influences of its length and arrangement the wiring inside the connector panel shall be as short as possible via 50 Ω coaxial cables if a BNC connector panel is used. The shielding (outer conductor) of the cables shall be grounded at both ends.

Repeat measurements shall be performed using the same RF port of the TEM cell, with the opposite port terminated by a 50 Ω impedance.

F.4 Limits for radiated disturbances from components/modules – TEM cell method

The level class to be used (as a function of the frequency band) shall be agreed upon between the vehicle manufacturer and the component supplier.

Recommended limits for radiated disturbances from components (both the setup with major field coupling to the wiring harness (F.2.1) and the setup with major coupling to the EUT (F.2.2) are given in Table F.1). Since the mounting location, vehicle body construction and harness design can affect the coupling of radio disturbances to the on-board radio, multiple limit levels are defined.

Table F.1 – Examples of limits for radiated disturbances – TEM cell method

Service / Band	Frequency MHz	Levels in dB(μV)														
		Class 5			Class 4			Class 3			Class 2			Class 1		
		Peak	Quasipeak	Average	Peak	Quasipeak	Average	Peak	Quasipeak	Average	Peak	Quasipeak	Average	Peak	Quasipeak	Average
BROADCAST																
LW	0,15 to 0,30	26	13	6	36	23	16	46	33	26	56	43	36	66	53	46
MW	0,53 to 1,8	20	7	0	28	15	8	36	23	16	44	31	24	52	39	32
SW	5,9 to 6,2	20	7	0	26	13	6	32	19	12	38	25	18	44	31	24
FM	76 to 108	26	13	6	32	19	12	38	25	18	44	31	24	50	37	30
TV Band I	41 to 88	16	–	6	22	–	12	28	–	18	34	–	24	40	–	30
TV Band III	174 to 230	16	–	6	22	–	12	28	–	18	34	–	24	40	–	30
DAB III	171 to 245	10	–	0	16	–	6	22	–	12	28	–	18	34	–	24
TV Band IV	468 to 944	Radiated emission – TEM cell Not applicable														
DTTV	470 to 770															
DAB L Band	1 447 to 1 494															
SDARS	2 320 to 2 345															
MOBILE SERVICES																
CB	26 to 28	20	7	0	26	13	6	32	19	12	38	25	18	44	31	24
VHF	30 to 54	20	7	0	26	13	6	32	19	12	38	25	18	44	31	24
VHF	68 to 87	20	7	0	26	13	6	32	19	12	38	25	18	44	31	24
VHF	142 to 175	20	7	0	26	13	6	32	19	12	38	25	18	44	31	24
Analogue UHF	380 to 512	Radiated emission – TEM cell Not applicable														
RKE	300 to 330															
RKE	420 to 450															
Analogue UHF	820 to 960															
GSM 800	860 to 895															
EGSM/GSM 900	925 to 960															
GPS L1 civil	1 567 to 1 583															
GLONASS L1	1 591 to 1 613															
GSM 1800 (PCN)	1 803 to 1 882															
GSM 1900	1 850 to 1 990															
3G / IMT 2000	1 900 to 1 992															
3G / IMT 2000	2 010 to 2 025															
3G / IMT 2000	2 180 to 2 172															
Bluetooth/802.11	2 400 to 2 500															

a) All values listed in this table are valid for the bandwidths in Table 1 and Table 2. If measurements have to be performed with different bandwidths than those specified in Table 1 and Table 2 because of noise floor requirements, then applicable limits are defined in the test plan.

b) Where multiple bands use the same limits the user selects the appropriate bands over which to test. When the test plan includes bands that overlap the test plan defines the applicable limit.

c) Although the limits for peak, quasi-peak and average detectors are shown, measurements with all three detectors are not required. See Figure 1.

F.5 TEM cell design

The dimensions of a TEM cell are shown in the Figure F.7a and F.7b and given in Table F.2.

Dimensions in millimetres – not to scale

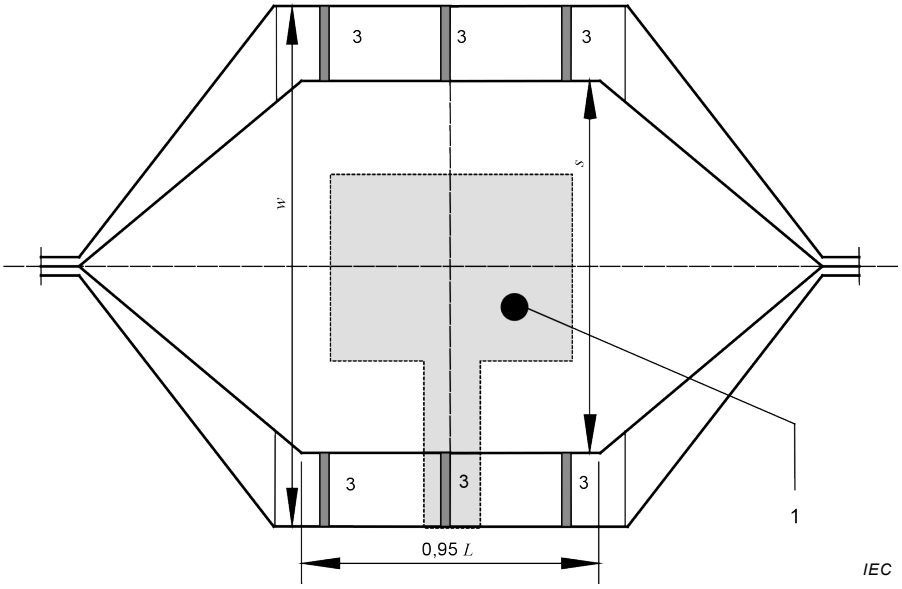

Figure F.7a – Horizontal section view at septum

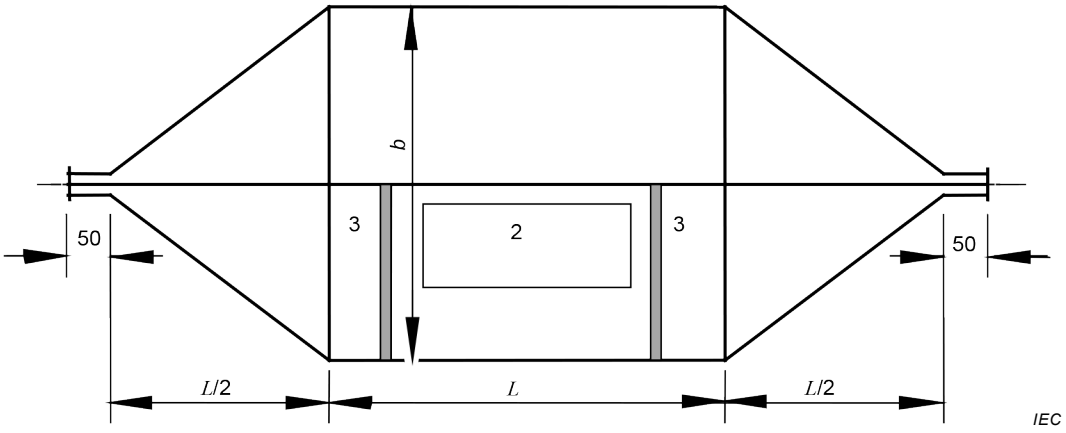

Figure F.7b – Vertical section view at septum

Key

1 Allowed working region: 0,33 W, 0,60 L

2 Access door

3 Dielectric supports

Figure F.7 – TEM cell

Table F.2 shows the dimensions for constructing TEM cells with specific upper frequency limits.

Table F.2 – Dimensions for TEM cells

Upper frequency MHz	**Cell form factor** ***W/b***	**Cell form factor** ***L/W***	**TEM cell height** ***b*** mm	**Septum width** ***S*** mm
100	1,00	1,00	1 200	1 000
200	1,69	0,66	560	700
200	1,00	1,00	600	500
300	1,67	1,00	300	360
500	1,50	1,00	200	230
NOTE The TEM cells in the box are typical for automotive component testing. For integrated circuit testing, even smaller TEM cells can be applicable for testing up to and above 1 GHz.				

Annex G
(informative)

Radiated emissions from components/modules – Stripline method

G.1 General

The stripline is an open waveguide, which consists of a reference ground plane and an active conductor (septum) and has characteristic impedance. Commonly used values for characteristic impedances are 50 Ω and 90 Ω. Information relating to the size and construction of a stripline is given in Figure G.2 and Figure G.3.

Users are encouraged to study and experiment with the test method to increase the body of knowledge with the aim of reaching consensus on including it in the main body of this standard at a future date.

The stripline may be used in the frequency range from 150 kHz to 400 MHz where the harness is the primary radiating/coupling element.

The limits of the frequency range can be extended up to 1 000 MHz, if:

– the dominance of TEM mode can be shown;

  NOTE For the design shown in Figure G.2 it is presumed that the TEM mode is dominant up to 400 MHz. For the design shown in Figure G.3 it is presumed that the TEM mode is dominant up to 1 000 MHz.

– the EUT is located under the septum;
– the height of the EUT is limited to 1/3 of the septum height.

Measurements shall be made in a shielded enclosure to eliminate high levels of external disturbances. For further details see Figure G.1.

The influence of the shielded enclosure on the measured impedance (i.e. reflection coefficient as measured with a network analyser) of the stripline should be less than 6 dB compared with an open field test site. To realize this it might be necessary to equip the shielded enclosure partially with absorbers. An example is shown in Figure G.1.

G.2 Test setup

G.2.1 General

For radiated emissions measurements, the arrangement of the EUT, test harness, load simulator and measuring equipment shall be equivalent to the example shown in Figure G.1.

Deviations of the location and length of the test harness (e.g. the original vehicle harness) and the location of the EUT have to be agreed between customer and supplier.

In order to achieve reproducible test results the EUT and the test arrangement shall be located at the same position in the stripline for each repeated measurement.

G.2.2 Stripline impedance matching

Correct impedance matching between the stripline and the measuring instrument of 50 Ω shall be maintained for all frequencies. This can be achieved by using lossless transmission line transformers (non-linear shape of the septum tapers or an additional external waveguide) or lumped passive network.

If the matching unit is a lumped passive network, appropriate correction of measurement results shall be made for any insertion loss.

G.2.3 Location of the EUT

The EUT shall be placed (50 ± 5) mm above the reference ground plane on a non-conductive, low relative permittivity material ($\varepsilon_r \leq 1{,}4$) and shall be located on the same side as the 50 Ω load of the stripline as shown in Figure G.1. The case of the EUT shall not be grounded to the reference ground plane unless it is intended to simulate the real vehicle configuration. In the case that the EUT is not located under the septum, the EUT shall be located at a distance of $\left(200\ {}^{+50}_{0}\right)$ mm from the edge of the septum.

G.2.4 Location and length of the test harness

The length of test harness parallel to the septum shall be (1 000 ± 50) mm.

The total length of the test harness between the EUT and the load simulator (or the RF boundary) is typical 1 700 mm and shall not exceed 2 000 mm. The same test harness can be used as with the ALSE test method (see 6.5).

The long segment of the test harness shall be within the inner one-third of the width of the septum. Ideally, it is placed under the centreline of the septum.

The wiring type is defined by the intended system application and requirement. The test harness shall be placed on a non-conductive, low relative permittivity material ($\varepsilon_r \leq 1{,}4$), (50 ± 5) mm above the reference ground plane. The locations of the EUT and load simulator require a harness bend angle of (90 ± 15)° (degrees).

G.2.5 Location of the load simulator

The load simulator should be located at a distance of $\left(200\ {}^{+50}_{0}\right)$ mm from the edge of the septum. If this cannot be met, the actual location of the load simulator shall be documented in the test report.

The load simulator shall be placed directly on the reference ground plane. If the load simulator has a metallic case, this case shall be bonded to the reference ground plane. Alternatively, the load simulator may be located adjacent to the reference ground plane (with the case of the load simulator bonded to the reference ground plane) or outside of the test chamber, provided the test harness from the EUT passes through an RF boundary bonded to the reference ground plane. When the load simulator is located on the reference ground plane, the DC power supply lines of the load simulator shall be connected through the AN(s) (see 6.2.2).

G.3 Test procedure

The general arrangement of the EUT, the harness and the peripherals, represents a standardized test condition. Any deviations from the standard test configuration shall be agreed between customer and supplier prior to testing and recorded in the test report.

The EUT shall be installed to operate under typical loading and operating conditions in the vehicle in such a way that the maximum emission state occurs. These operating conditions have to be defined in the test plan to ensure that customer and supplier are performing identical tests.

The arrangement of the EUT as well as the measuring equipment shall be functionally equivalent to the example shown in Figure G.1 and shall be defined in the test plan.

Top view *Dimensions in millimetres*

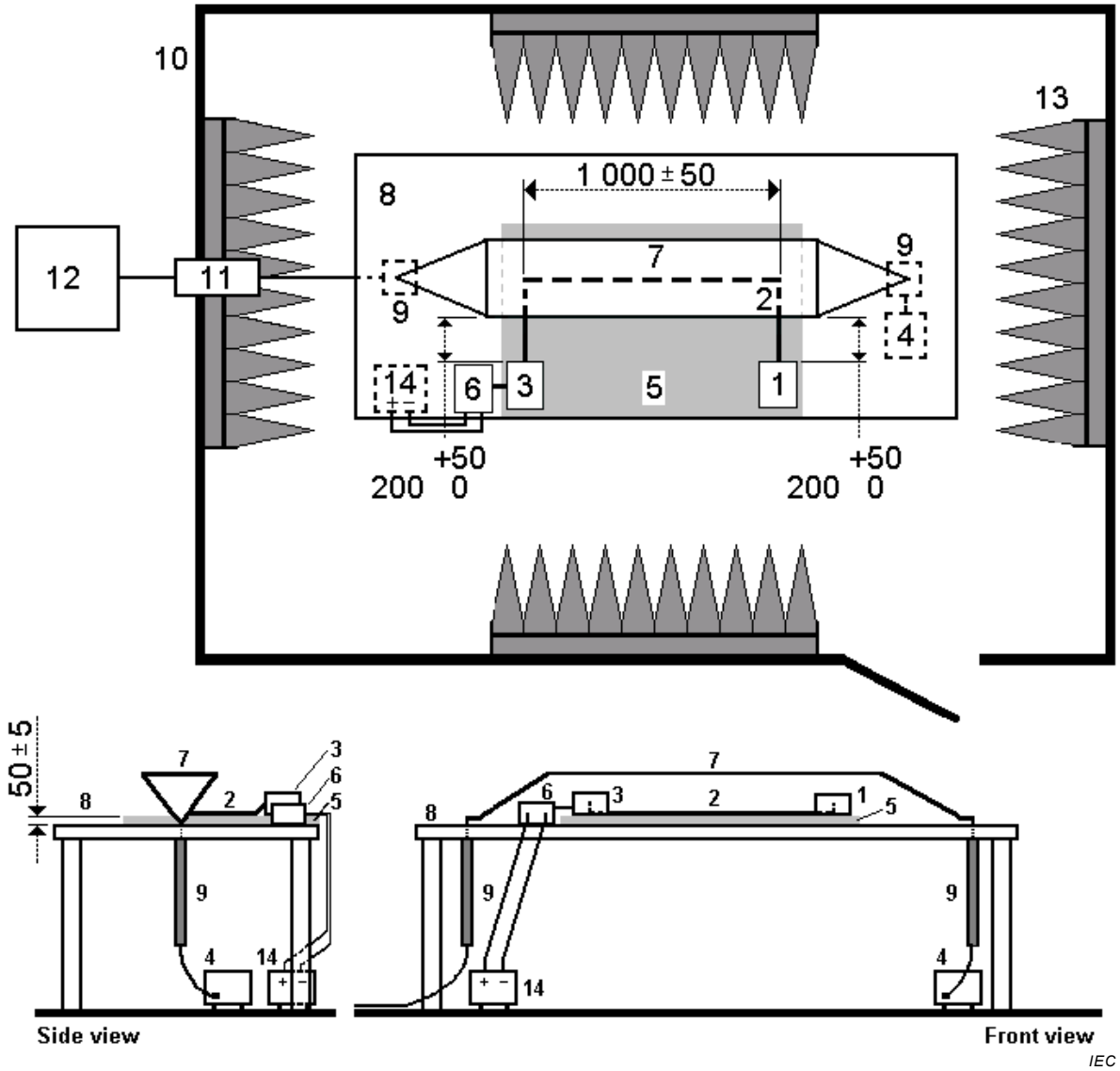

Key

1	EUT	8	Reference ground plane
2	Test harness	9	Matching unit (if necessary)
3	Load simulator	10	Wall of shielded room
4	50 Ω load (location optional)	11	Bulkhead connector
5	Low relative permittivity support ($\varepsilon_r \leq 1{,}4$)	12	Measuring instrument
6	Artificial network (AN)	13	Absorbers (if necessary)
7	Septum	14	Power supply (location optional)

Figure G.1 – Example of a basic stripline test setup in a shielded enclosure

G.4 Limits for radiated emissions from components/modules – Stripline method

Some disturbance sources are continuous emitters and require a lower limit than a disturbance source which operates only periodically or for short intervals.

The limits of the radiated electromagnetic energy may be different for each disturbance source and arrangement (coupling between antenna and electronic equipment in the vehicle).

For evaluation of radiated emissions from components/modules the RF voltage at the stripline output is to be measured.

Table G.1 – Examples of limits for radiated disturbances – Stripline method

Service / Band	Frequency MHz	Levels in dB(μV)														
		Class 5			Class 4			Class 3			Class 2			Class 1		
		Peak	Quasipeak	Average	Peak	Quasipeak	Average	Peak	Quasipeak	Average	Peak	Quasipeak	Average	Peak	Quasipeak	Average
BROADCAST																
LW	0,15 to 0,30	47	34	27	57	44	37	67	54	47	77	64	57	87	74	67
MW	0,53 to 1,8	41	28	21	49	36	29	57	44	37	65	52	45	73	60	53
SW	5,9 to 6,2	41	28	21	47	34	27	53	40	33	59	46	39	65	52	45
FM	76 to 108	32	19	12	38	25	18	44	31	24	50	37	30	56	43	36
TV Band I	41 to 88	22	–	12	28	–	18	34	–	24	40	–	30	46	–	36
TV Band III	174 to 230	22	–	12	28	–	18	34	–	24	40	–	30	46	–	36
DAB III	171 to 245	16	–	6	22	–	12	28	–	18	34	–	24	40	–	30
TV Band IV	468 to 944	22	–	12	28	–	18	34	–	24	40	–	30	46	–	36
DTTV	470 to 770	26	–	16	32	–	22	38	–	28	44	–	34	50	–	40
DAB L Band	1 447 to 1 494	Radiated emission – Stripline Not applicable														
SDARS	2 320 to 2 345															
MOBILE SERVICES																
CB	26 to 28	40	28	21	46	34	27	52	40	33	58	46	39	64	52	45
VHF	30 to 54	32	19	12	38	25	18	44	31	24	50	37	30	56	43	36
VHF	68 to 87	26	13	6	32	19	12	38	25	18	44	31	24	50	37	30
VHF	142 to 175	26	13	6	32	19	12	38	25	18	44	31	24	50	37	30
Analogue UHF	380 to 512	26	13	6	32	19	12	38	25	18	44	31	24	50	37	30
RKE	300 to 330	20	–	6	26	–	12	32	–	18	38	–	24	44	–	30
RKE	420 to 450	20	–	6	26	–	12	32	–	18	38	–	24	44	–	30
Analogue UHF	820 to 960	26	13	6	32	19	12	38	25	18	44	31	24	50	37	30
GSM 800	860 to 895	32	–	12	38	–	18	44	–	24	50	–	30	56	–	36
EGSM/GSM 900	925 to 960	32	–	12	38	–	18	44	–	24	50	–	30	56	–	36
GPS L1 civil	1 567 to 1 583	Radiated emission – Stripline Not applicable														
GLONASS L1	1 591 to 1 613															
GSM 1800 (PCN)	1 803 to 1 882															
GSM 1900	1 850 to 1 990															
3G / IMT 2000	1 900 to 1 992															
3G / IMT 2000	2 010 to 2 025															
3G / IMT 2000	2 180 to 2 172															
Bluetooth/802.11	2 400 to 2 500															

a) All values listed in this table are valid for the bandwidths in Table 1 and Table 2. If measurements have to be performed with different bandwidths than those specified in Table 1 and Table 2 because of noise floor requirements, then applicable limits are defined in the test plan.

b) Where multiple bands use the same limits the user selects the appropriate bands over which to test. When the test plan includes bands that overlap the test plan defines the applicable limit.

c) Although the limits for peak, quasi-peak and average detectors are shown, measurements with all three detectors are not required. See Figure 1.

These limits have been established for a 90 Ω stripline design as shown in Figure G.3. In case of using other stripline impedance characteristics than 90 Ω, the limits have to be adapted in accordance with the following Equation G.1:

$$K_{\frac{90\Omega}{Z_2}} = 20\lg\sqrt{\frac{90\Omega}{Z_2}} \quad \text{dB} \tag{G.1}$$

Example for a stripline with 50 Ω characteristic impedance:

$$K_{\frac{90\Omega}{50\Omega}} = 20\lg\sqrt{\frac{90\Omega}{50\Omega}} = 2{,}54 \text{ dB} \tag{G.2}$$

Limits $Z_{50\ \Omega}$ = Limits $Z_{90\ \Omega}$ − $K_{90\ \Omega/50\ \Omega}$ = Limits $Z_{90\ \Omega}$ − 2,54 dB

where

K is the correction factor for limits in dB;

Z is the characteristic impedance of stripline in Ω.

G.5 Stripline design

An example of a 50 Ω stripline construction is shown in Figure G.2 and for a 90 Ω stripline in Figure G.3. The ratio of b/h determines the characteristic impedance. If dimension b is greater than h, the following Equation G.3 applies:

$$Z = \frac{120 \times \pi}{\frac{b}{h} + 2{,}42 - 0{,}44 \times \frac{h}{b} + \left[1 - \frac{h}{b}\right]^6} \tag{G.3}$$

where

Z is the characteristic impedance of the stripline in Ω;

b is the stripline septum width in mm;

h is the stripline septum height above the reference ground plane in mm;

π = 3,141 59.

NOTE Typical striplines are constructed to have an impedance of either 50 Ω or 90 Ω with b/h equal to 5 and 1,83, respectively. The termination can be either a resistive load or a tapered matching section terminated in a 50 Ω coaxial resistive load. A resistive load can be constructed of carbon resistors, conductive strips, thick film on a ceramic substrate, etc. in such a way that it matches the characteristic impedance of the stripline and minimizes the standing waves ratio.

Dimensions in millimetres

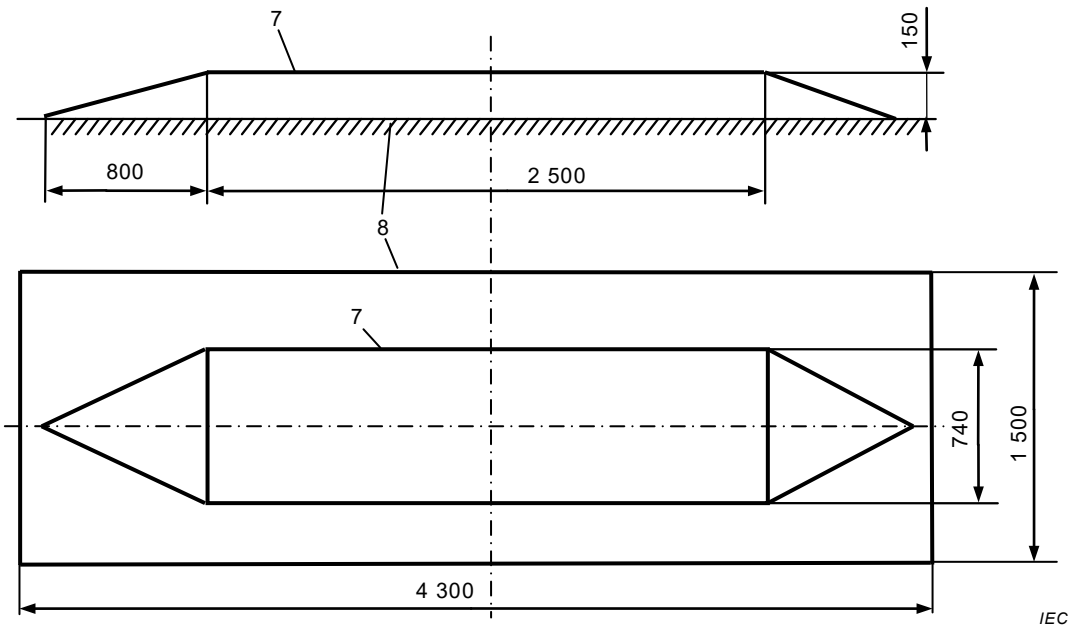

Key

7 Septum

8 Reference ground plane

Figure G.2 – Example for a 50 Ω stripline

Dimensions in millimetres

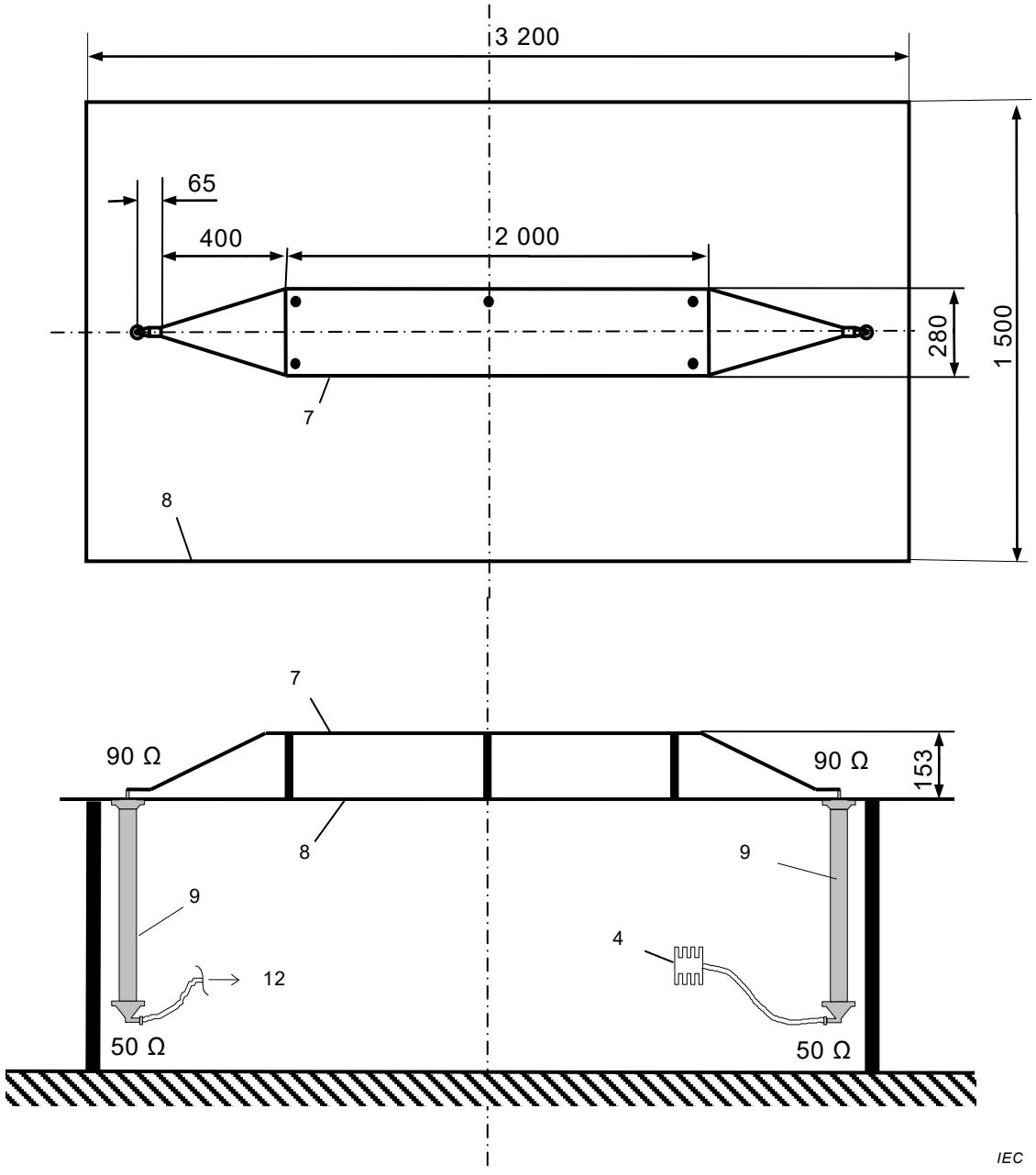

Key

4 50 Ω load
7 Septum
8 Reference ground plane
9 Matching unit
12 Measuring instrument

Figure G.3 – Example for a 90 Ω stripline

Annex H
(informative)

Interference to mobile radio communication in the presence of impulsive noise – Methods of judging degradation

H.1 General

This annex provides methods of judging the degradation of radio communication in the presence of impulsive noise.

H.2 Survey of methods of judging degradation to radio channel

H.2.1 General

Test programs have been conducted in the United States of America by the Federal Communications Commission (FCC) and the Motor Vehicle Manufacturers Association (MVMA, later the American Automobile Manufacturers Association, AAMA, now disbanded). These test programs were directed toward providing a better understanding of the effects of motor vehicles on mobile communications reception.

The tests measured the degradation to communications systems subjectively and objectively at numerous receiver frequencies using several classes of automotive ignition noise sources such as a traffic stream and a controlled matrix of vehicles. Correlation between various objective and subjective measures of degradation was studied using rating scales employed by the FCC and MVMA for grading communication quality.

H.2.2 Subjective tests

H.2.2.1 Subjective tests of annoyance

Subjective degradation tests were conducted by the FCC using a single vehicle and groups of vehicles simulating traffic patterns. The FCC proposed and used a subjective jury rating scale based upon annoyance which had been used traditionally to determine the effects of ambient noise on job performance, accident rate, and fatigue of personnel.

Grade	Interfering effect was
5	almost nil
4	noticeable
3	annoying
2	very annoying
1	so bad the presence of speech was barely discerible

This grade system is very nearly the same as that given in ITU-R Recommendation ITU-R BS.1284-1 [3] which should be used for future work if annoyance testing is conducted.

Quality		Impairment	
5	excellent	5	imperceptible
4	good	4	perceptible, but not annoying
3	fair	3	slightly annoying
2	poor	2	annoying
1	bad	1	very annoying

Annoyance is a highly subjective psychological reaction. The degree of annoyance caused by audible noise has been found to be influenced by a large number of variable physical and psychological factors (including illness, fatigue, status of interpersonal relations, and family problems).

H.2.2.2 Subjective tests of intelligibility

H.2.2.2.1 General

Since land mobile communication systems are used primarily to transmit voice messages, the performance of such systems should be based primarily on the intelligibility of the received signal in the presence of ignition noise.

The most common procedure for determining the intelligibility of a voice channel is a subjective method involving trained speakers and listener jury panels that directly score the percentage of speech that is intelligible. These schemes have the merit of producing repeatable results. Unfortunately, subjective scoring methods are expensive and time-consuming. As a result, they are not widely used.

The subjective scale for intelligibility proposed by the MVMA is:

Grade	Description
5	could understand the message extremely well
4	could understand the message fairly well
3	think I understood, but had to guess at some words
2	could barely discern the message
1	could not detect speech at all

H.2.2.2.2 Intelligibility test method

Beginning at 20 dB quieting with the vehicle ignition noise source off, the radio frequency input level was reduced by 1 dB decrements and scored at each decrement by the jury until the jury reached Grade 1 (worst). Then the radio frequency input level was increased by 1 dB increments until the 20 dB quieting level was again reached.

The radio frequency input level was then increased by 3 dB increments until the jury rated the quality Grade 5 (best). The radio frequency input level was then decreased by 3 dB decrements until the 20 dB quieting level was reached.

The entire process was repeated with the vehicle noise source in operation.

The results of the two tests (noise source off / noise source on) were then compared and the difference in radio frequency level for a particular quality grade (in decibels) was reported as the subjective degradation.

H.2.3 Objective tests

H.2.3.1 General

Uncertainty in subjective measurements arises from ambiguity of the rating scale definition, and variability of juror judgement. The latter source of error is largely caused by psychological factors. Objective measurements should have uncertainties less than those obtained from subjective tests.

A study carried out by the Institute for Telecommunication Sciences [1][2] develops a method of obtaining an objective intelligibility measure giving good results for speech sent through both analogue and digital noise-corrupted communication channels. The distortion measure is obtained using Linear Predictive Coding (LPC), a mathematical technique widely known for its application to the analysis and synthesis of speech.

H.2.3.2 Objective test method

To develop an objective intelligibility measure for corrupted speech, a comparison shall be performed between the distorted speech and the original noise-free speech. A subjective intelligibility measure of the distorted speech shall also be available in order to judge the quality of the objective measure being used. Both of these requirements are met by first making a noise-free master tape of preselected speech, then sending it through the voice communication channels to be tested and making a recording of the speech at the channel outputs. The latter recording can be subjectively scored for intelligibility, and also compared with the original speech by a mathematical technique to obtain an objective score.

The preselected speech to be sent over a voice channel for intelligibility scoring consists of phonetically balanced groups of isolated words, as opposed to complete sentences or nonsense syllables. These phonetically balanced words were used because subjective scores have been shown to be repeatable, which is a necessary criterion for this study. (During tests employing vehicles as a noise source, subjective scoring by listener panels was conducted and compared to the objective scores, resulting in good correlation.)

H.2.4 Conclusions relating to judgement of degradation

Numerous studies have been conducted over the years to develop a simple, inexpensive, objective method of measuring land mobile receiver degradation in the presence of ignition noise. Linear predictive coding (LPC) is neither simple nor inexpensive (when compared to the equipment used for CISPR 12 [6] and CISPR 25 measurements), but it is technically a good objective method for measuring receiver degradation.

Subjective tests have proved to be effective in rating mobile receiver degradation. Of the two subjective rating methods in use, intelligibility was determined to be superior to annoyance in characterizing the effect of radio noise on a communication link. Most objective measurements taken during the subjective testing, however, showed poor correlation. The linear predictive coding (LPC) method showed good correlation with the subjective intelligibility test method. Subjective tests are preferred, however, because of their reduced complexity and resulting lesser cost.

Considering only the subjective test methods, and as a result of the numerous tests conducted, it is recommended that intelligibility be used as the index of communications system performance rather than annoyance.

---

2 Numbers in square brackets refer to the Bibliography.

Annex I
(normative)

Test methods for shielded power supply systems for high voltages in electric and hybrid vehicles

I.1 General

Components/modules used in electric vehicles are electronic components connected with LV network and/or HV power supply systems.

The present electric vehicle technology provides two categories of electric systems. The first category consists of the common LV systems (typically unshielded) and the second of the HV systems (typically shielded).

This annex gives additional test set-up methods and limits for emission measurement according to Clause 6 when considering the HV power supply system parts, which are typically fully shielded.

For HV systems with both unshielded LV lines and shielded HV lines, measurements on unshielded LV lines shall be performed using the test methodologies and setup defined in this annex and with the limits defined in Clause 6.

Examples of HV power supply system parts are:

- inverter with electrical motor
- onboard charger
- DC-DC-converter
- electrical heater
- high voltage battery
- all devices which have in addition to the LV power supply a HV power connection.

The limits defined in this annex for conducted emissions are valid for shielded HV systems only. They are based on the limits defined in Clause 6 for unshielded systems (i.e. either LV systems or unshielded HV systems) taking into account the decoupling factor identified between both networks.

This annex specifies the following tests:

- conducted RF voltage measurements on shielded power supply lines with shielded artificial networks
- conducted RF current measurements on shielded cables of power supply systems
- radiated RF emission measurements of components/modules
- interaction between HV and LV ports of the system due to coupling

I.2 Conducted emission from components/modules on HV power lines – Voltage method

I.2.1 Ground plane arrangement

The location of the EUT, test harness and load simulator on the ground plane is shown in Figure I.1, Figure I.2 and Figure I.3. The reference ground plane conditions defined in 6.2.1 (radiated emissions) apply.

I.2.2 Test set-up

The set-up is adapted from 6.3.2 and is shown in Figure I.1. The shielding configuration and any protective ground connection should be representative of the vehicle application and shall be defined in the test plan. The battery charger ground connection shall also be defined in the test plan. EUTs and loads shall be connected to ground using impedance as defined in the test plan. The vehicle HV battery should be used; otherwise the external HV power supply shall be connected via feed-through-filtering.

Unless otherwise specified in the test plan (e.g. use of original vehicle harnesses), the length of harnesses shall be as follows:

- $200\ ^{+200}_{0}$ mm for the LV lines,
- $1\ 700\ ^{+300}_{0}$ mm for the HV lines and the length of the HV test harness parallel to the front of the ground plane shall be (1 500 ± 75) mm
- less than 1 000 mm for the three phase lines between EUT and electric motor(s).

Unless physically impossible, all of the harnesses shall be placed on a non-conductive, low relative permittivity material ($\varepsilon_r \leq 1{,}4$) at (50 ± 5) mm above the ground plane.

HV lines shall be placed at a minimum distance of 100 mm from the edge of the reference ground plane.

Shielded supply lines for the positive HV DC terminal line (HV+), the negative HV DC terminal line (HV−) and three phase HV AC lines may be separate coaxial cables or in a common shield depending on the connector system used. The original HV harness from the vehicle may be used optionally.

Unless otherwise specified in the test plan the EUT case shall be connected to the ground plane either directly or via defined impedance.

Figure I.2 shows a more complex configuration adding an electric motor or load machine emulation to the setup, e.g. in case the EUT is an electric power unit. The electric motor housing shall be bonded to the ground plane, if applicable.

In case of using a load machine emulation

- the test plan shall define the connection conditions between the EUT and the load machine emulation and also the necessary grounding conditions,
- the load machine emulation will replace the “electric motor”, the “mechanical connection”, the “filtered mechanical bearing” and the “brake or propulsion motor”,
- the three phase supply lines will be fed through a power line filter.

The electric motor may be placed on a separate ground plane. In this case, the test plan shall define the connection configuration between this separate motor ground plane and the EUT ground plane (representing the vehicle grounding configuration).

Figure I.3 shows an example of setup for systems with inverter/charger device.

NOTE 1 Care is taken when using a power line filter (item 16 in the key) on the HV supply line. This filter will increase the common mode capacitance between HV+ and ground reference or HV− and ground reference and can lead to the generation of extra resonances.

NOTE 2 Depending on the package situation in the vehicle and the material used for the chassis (e.g. metal or alternative material) the impedance of the connection of the shielding to the vehicle chassis can vary drastically.

Voltage measurements have to be performed successively on HV+ and HV− power supply lines by connecting the measuring instrument on the measuring port of the related HV-AN, the measuring port of the HV-AN in the other supply line being terminated with a 50 Ω load.

Dimensions in millimetres – not to scale

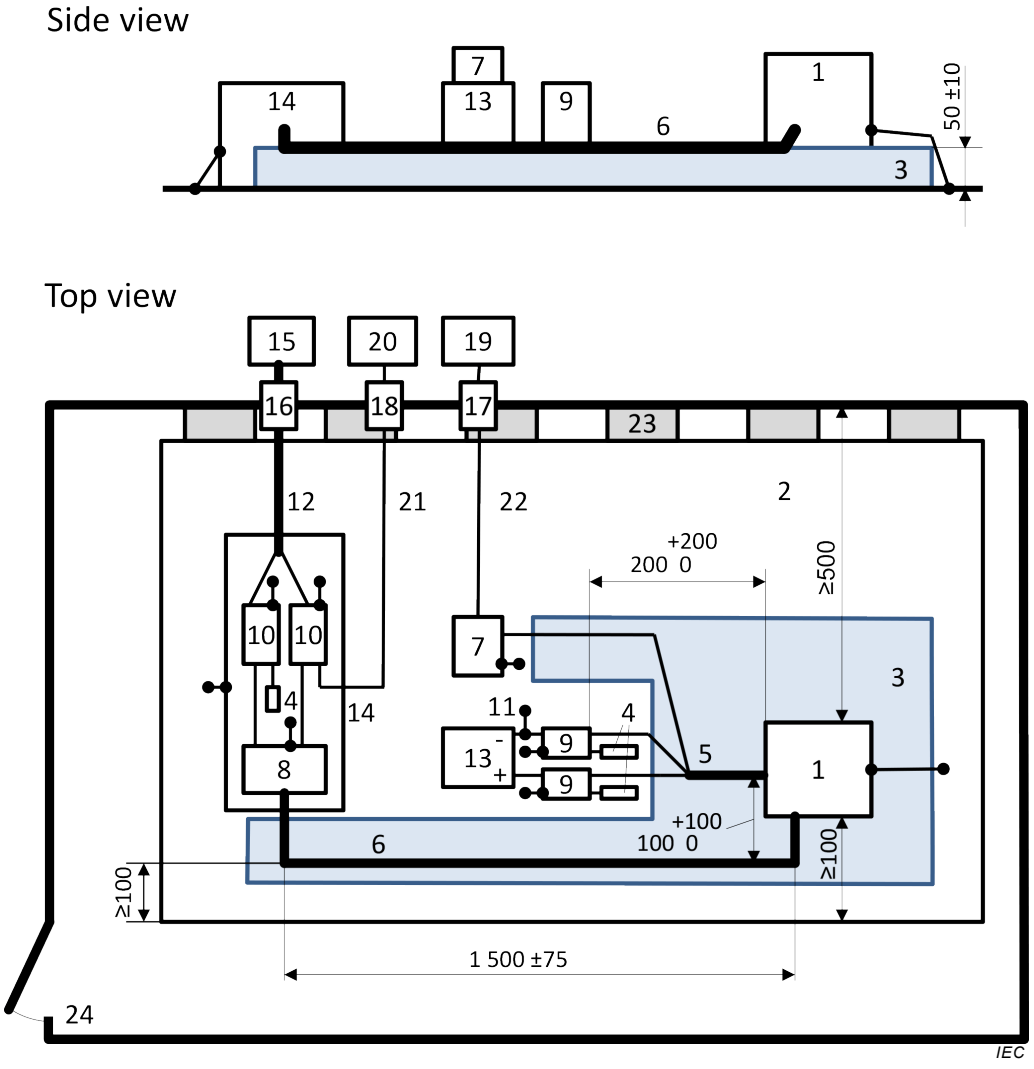

Key

1 EUT
2 Ground plane
3 Low relative permittivity support ($\varepsilon_r \leq 1{,}4$) thickness 50 mm
4 50 Ω load
5 LV harness
6 HV lines (HV+, HV−)
7 LV load simulator
8 Impedance matching network (optional)
9 LV AN
10 HV AN
11 LV supply lines
12 HV supply lines
13 LV power supply 12 V / 24 V / 48 V (should be placed on the reference ground plane)
14 Additional shielded box
15 HV power supply (shielded if placed inside shielded enclosure)
16 Power line filter
17 Fibre optic feed through
18 Bulk head connector
19 Stimulating and monitoring system
20 Measuring instrument
21 High quality coaxial cable, e.g. double shielded (50 Ω)
22 Optical fibre
23 Ground straps (see 6.2.1)
24 Shielded enclosure

Figure I.1 – Conducted emission – Example of test setup for EUTs with shielded power supply systems

Dimensions in millimetres – not to scale

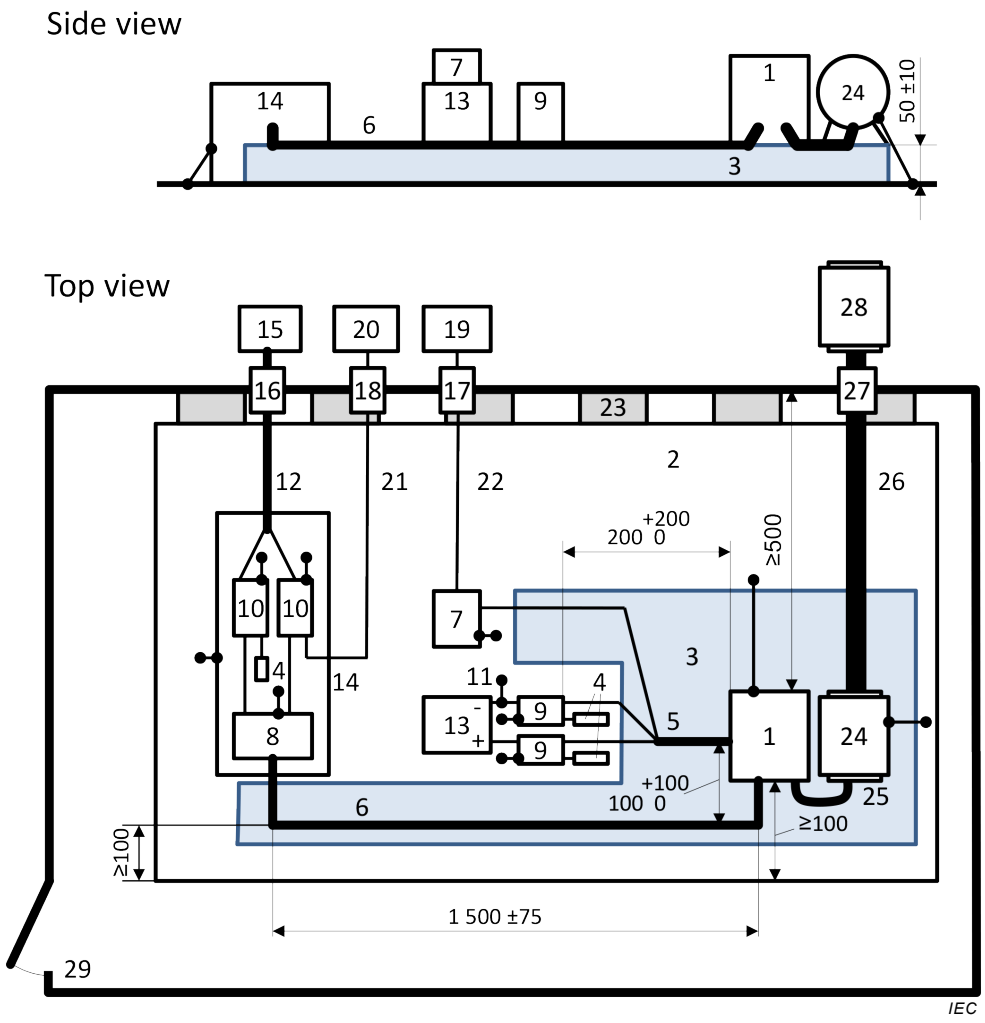

Key

1	EUT	15	HV power supply (should be shielded if placed inside the shielded enclosure)
2	Ground plane	16	Power line filter
3	Low relative permittivity support ($\varepsilon_r \leq 1{,}4$) thickness 50 mm (a non-conductive support can be used for the electric motor)	17	Fibre optic feed through
4	50 Ω load	18	Bulk head connector
5	LV harness	19	Stimulating and monitoring system
6	HV lines (HV+, HV−)	20	Measuring instrument
7	LV load simulator	21	High quality coaxial cable e.g. double shielded (50 Ω)
8	Impedance matching network (optional)	22	Optical fibre
9	LV AN	23	Ground straps (see 6.2.1)
10	HV AN	24	Electric motor
11	LV supply lines	25	Three phase motor supply lines
12	HV supply lines	26	Mechanical connection (e.g. non-conductive)
13	LV power supply 12 V / 24 V / 48 V (should be placed on the reference ground plane)	27	Filtered mechanical bearing
14	Additional shielded box	28	Brake or propulsion motor
		29	Shielded enlosure

NOTE The electric motor, mechanical connection, filtered mechanical bearing and brake or propulsion motor can be replaced by a load machine emulation.

Figure I.2 – Conducted emission – Example of test setup for EUTs with shielded power supply systems with electric motor attached to the bench

Dimensions in millimetres – not to scale

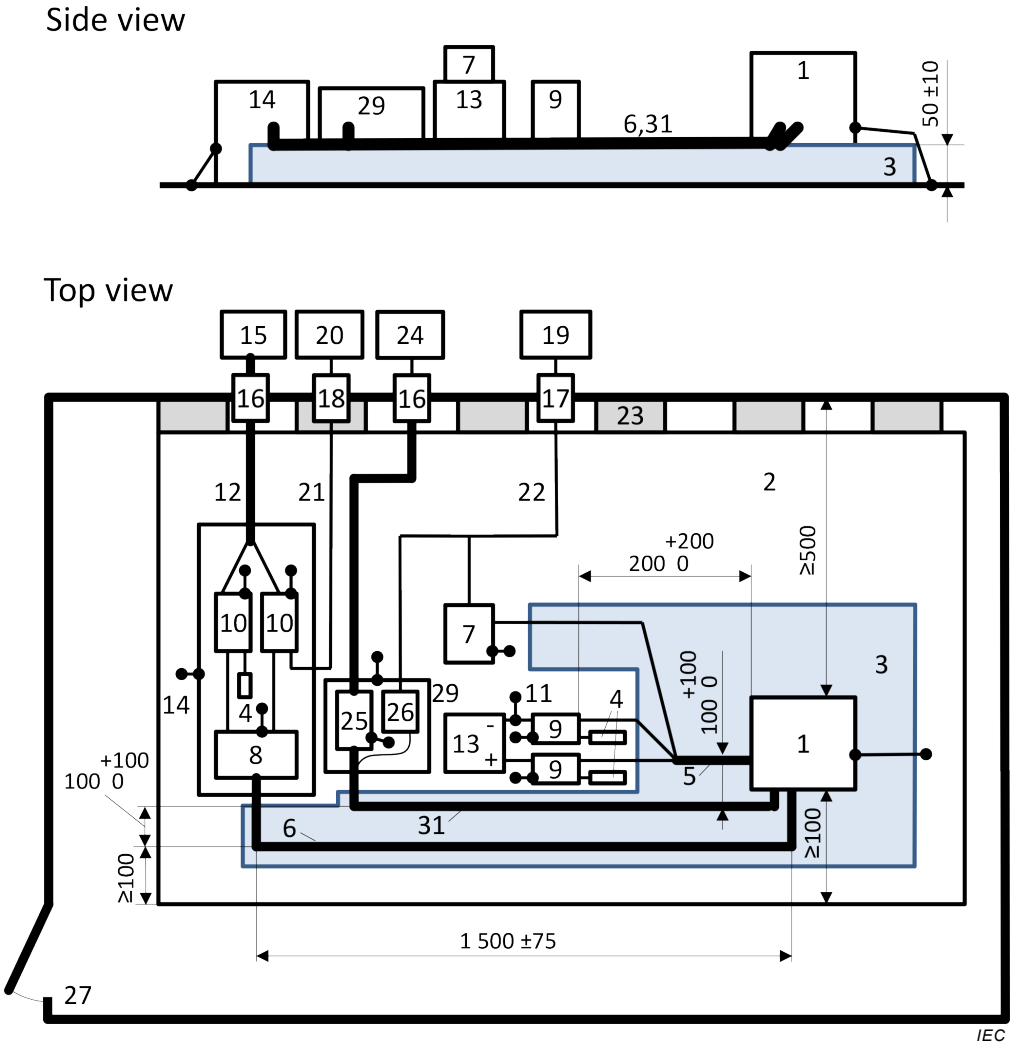

Key

1	EUT
2	Ground plane
3	Low relative permittivity support ($\varepsilon_r \leq 1{,}4$) thickness 50 mm
4	50 Ω load
5	LV harness
6	HV lines (HV+, HV−)
7	LV load simulator
8	Impedance matching network (optional)
9	LV AN
10	HV AN
11	LV supply lines
12	HV supply lines
13	LV power supply 12 V / 24 V / 48 V (should be placed on the reference ground plane
14	Additional shielded box
15	HV power supply (should be shielded if placed inside shielded enclosure)
16	Power line filter
17	Fibre optic feed through
18	Bulk head connector
19	Stimulating and monitoring system
20	Measuring instrument
21	High quality coaxial cable e.g. double shielded (50 Ω)
22	Optical fibre
23	Ground straps (see 6.2.1)
24	AC power mains
25	AMN for AC power mains
26	AC charging load simulator
27	Shielded enclosure
29	Additional shielded box (optional)
31	AC lines

Figure I.3 – Conducted emission – Example of test setup for EUTs with shielded power supply systems and inverter/charger device

I.2.3 Limits for conducted emission – Voltage method

Measurements shall be performed at the RF-output ports of the LV-ANs and at the RF-output ports of the HV-ANs. RF-output ports not used for measurements shall be terminated with 50 Ω loads. For the measurement at the RF-output of the LV-ANs the limits in 6.3 apply.

The applicable limits for the measurements at the RF-output of the HV-ANs are defined taking into account the shielding performance of the overall HV systems. It is determined by coupling between HV and LV networks. This coupling can be internal to the component or external to the enclosure. Less HV shielding performance results in more severe HV limit classes. HV limit classes from Table 1 are determined by the OEM based on their overall HV system knowledge. HV-LV coupling attenuation can be tested according to Clause I.5.

For unshielded systems the voltage limits of 6.3 shall be used.

Basis for limits of Table I.1 are the limits from 6.3.4, Table 5 modified by the addition of the required coupling attenuation (attenuation class A5), between HV and LV part, i.e.

$$U_{\text{Limit,HV}} = U_{\text{Limit,LV}} + a_{\text{c,Ax}}$$, see I.5.3.

where $a_{\text{c,Ax}}$ is the coupling attenuation in Table I.3, for the chosen attenuation class A_x.

Table I.1 – Example for HV limits for conducted voltage measurements at shielded power supply devices (HV-LV decoupling class A5)

Service / Band	Frequency MHz	Levels in dB(μV)														
		Class 5(A5)			Class 4(A5)			Class 3(A5)			Class 2(A5)			Class 1(A5)		
		Peak	Quasipeak	Average	Peak	Quasipeak	Average	Peak	Quasipeak	Average	Peak	Quasipeak	Average	Peak	Quasipeak	Average
BROADCAST																
LW	0,15 to 0,30	107	94	87	117	104	97	127	114	107	137	124	117	147	134	127
MW	0,53 to 1,8	84	71	64	92	79	72	100	87	80	108	95	88	116	103	96
SW	5,9 to 6,2	77	64	57	83	70	63	89	76	69	95	82	75	101	88	81
FM	76 to 108	50	37	30	56	43	36	62	49	42	68	55	48	74	61	54
TV Band I	41 to 88	47		37	53		43	59		49	65		55	71		61
TV Band III	174 to 230	Conducted emission – Voltage method Not applicable														
DAB III	171 to 245															
TV Band IV	468 to 944															
DTTV	470 to 770															
DAB L Band	1 447 to 1 494															
SDARS	2 320 to 2 345															
MOBILE SERVICES																
CB	26 to 28	61	48	41	67	54	47	73	60	53	79	66	59	85	72	65
VHF	30 to 54	59	46	39	65	52	45	71	58	51	77	64	57	83	70	63
VHF	68 to 87	51	38	31	57	44	37	63	50	43	69	56	49	75	62	55
VHF	142 to 175	Conducted emission – Voltage method Not applicable														
Analogue UHF	380 to 512															
RKE	300 to 330															
RKE	420 to 450															
Analogue UHF	820 to 960															
GSM 800	860 to 895															
EGSM/GSM 900	925 to 960															
GPS L1 civil	1 567 to 1 583															
GLONASS L1	1 591 to 1 613															
GSM 1800 (PCN)	1 803 to 1 882															
GSM 1900	1 850 to 1 990															
3G / IMT 2000	1 900 to 1 992															
3G / IMT 2000	2 010 to 2 025															
3G / IMT 2000	2 180 to 2 172															
Bluetooth/802.11	2 400 to 2 500															

a) All values listed in this table are valid for the bandwidths in Table 1 and Table 2. If measurements have to be performed with different bandwidths than those specified in Table 1 and Table 2 because of noise floor requirements, then applicable limits are defined in the test plan.

b) Where multiple bands use the same limits the user selects the appropriate bands over which to test. When the test plan includes bands that overlap the test plan defines the applicable limit.

c) Although the limits for peak, quasi-peak and average detectors are shown, measurements with all three detectors are not required. See Figure 1.

I.3 Conducted emission from components/modules on HV power lines – current probe method

I.3.1 Reference ground plane arrangement

The location of the EUT, the test harness and the load simulator on the reference ground plane (table with metal plane) is shown in Figure I.4, Figure I.5 and Figure I.6.

I.3.2 Test setup

The set-up is adapted from 6.4.1 and is shown in Figure I.4. The shielding configuration and any protective ground connection should be representative of the vehicle application and shall be defined in the test plan. The battery charger ground connection shall also be defined in the test plan. EUTs and loads shall be connected to ground using impedance as defined in the test plan. The vehicle HV battery should be used; otherwise the external HV power supply shall be connected via feed-through-filtering.

Unless otherwise specified in the test plan (e.g. use of original vehicle harnesses), the length of harnesses shall be as follows:

- $1\,700\,^{+300}_{0}$ mm for the LV lines,
- $1\,700\,^{+300}_{0}$ mm for the HV lines and the length of the HV test harness parallel to the front of the reference ground plane shall be (1 500 ± 75) mm,
- less than 1 000 mm for the three phase lines between EUT and electric motor(s).

Unless physically impossible, all of the harnesses shall be placed on a non-conductive, low relative permittivity material ($\varepsilon_r \leq 1{,}4$) at (50 ± 5) mm above the reference ground plane. LV lines shall be placed at a minimum distance of 200 mm from the edge of the reference ground plane. The distance between the LV lines and HV lines shall be $100\,^{+100}_{0}$ mm.

The shielded harnesses used for this test shall be representative of the vehicle application in terms of cable construction and connector termination as defined in the test plan.

Unless otherwise specified in the test plan the EUT case shall be connected to the reference ground plane either directly or via defined impedance.

Figure I.5 shows a more complex configuration adding an electric motor or load machine emulation to the setup, e.g. in case the EUT is an electric power unit. The electric motor housing shall be bonded to the ground plane, if applicable.

In case of using a load machine emulation

- the test plan shall define the connection conditions between the EUT and the load machine emulation and also the necessary grounding conditions,
- the load machine emulation will replace the “electric motor”, the “mechanical connection”, the “filtered mechanical bearing” and the “brake or propulsion motor”.

The three phase supply lines will be fed through a power line filter.

NOTE 1 Care is taken when using a power line filter (item 16 in the key) on the HV supply line. This filter will increase the common mode capacitance between HV+ and ground reference or HV− and ground reference and can lead to the generation of extra resonances.

NOTE 2 Depending on the package situation in the vehicle and the material used for the chassis (e.g. metal or alternative material) the impedance of the connection of the shielding to the vehicle chassis can vary drastically.

Current probe measurements have to be performed on HV+ and HV− power supply lines, and the three phase lines of the electric motor, separately (if applicable) and commonly. Measure the emission with the probe positioned d = 50 mm and d = 750 mm (depending on harness length) from the EUT.

The deviations of the common test setup have to be defined in the test plan and/or in the test report. If the electric motor and the power unit is one unit, measurement according to Figure I.5 is not applicable (not needed).

NOTE 3 Care is taken by using a protection earth line which can influence the test result.

Figure I.6 shows an example of setup for systems with inverter/charger device.

Dimensions in millimetres – not to scale

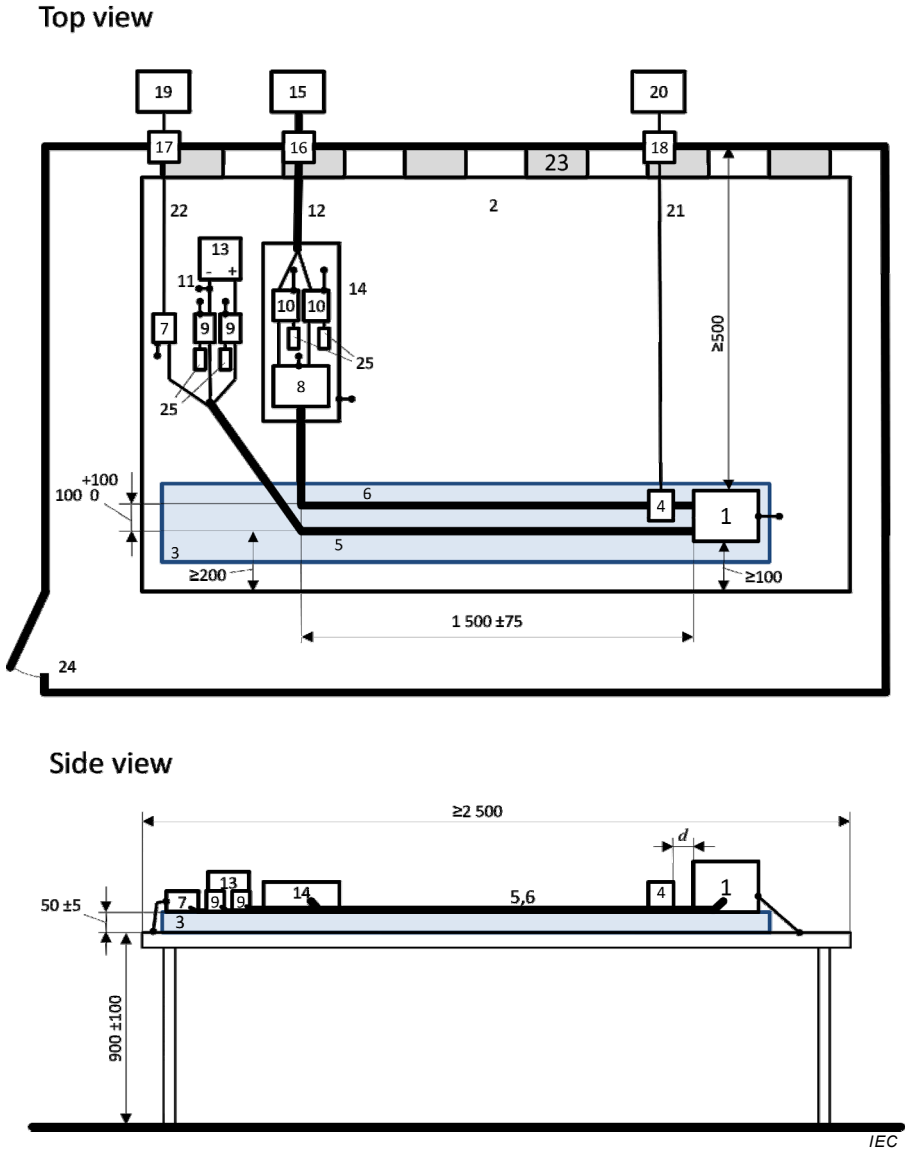

Key

1	EUT	14	Additional shielded box
2	Reference ground plane	15	HV power supply (should be shielded if placed inside the shielded enclosure)
3	Low relative permittivity support ($\varepsilon_r \leq 1{,}4$) thickness 50 mm	16	Power line filter
4	Current probe ("d" see I.3.2)	17	Fibre optic feed through
5	LV harness	18	Bulk head connector
6	HV lines (HV+, HV−)	19	Stimulating and monitoring system
7	LV load simulator	20	Measuring instrument
8	Impedance matching network (optional)	21	High quality coaxial cable e.g. double shielded (50 Ω)
9	LV AN	22	Optical fibre
10	HV AN	23	Ground straps (see 6.2.1)
11	LV supply lines	24	Shielded enclosure
12	HV supply lines	25	50 Ω load
13	LV power supply 12 V / 24 V / 48 V (should be placed on the reference ground plane)		

Figure I.4 – Conducted emission – Example of test setup current probe measurement on HV lines for EUTs with shielded power supply systems

Dimensions in millimetres – not to scale

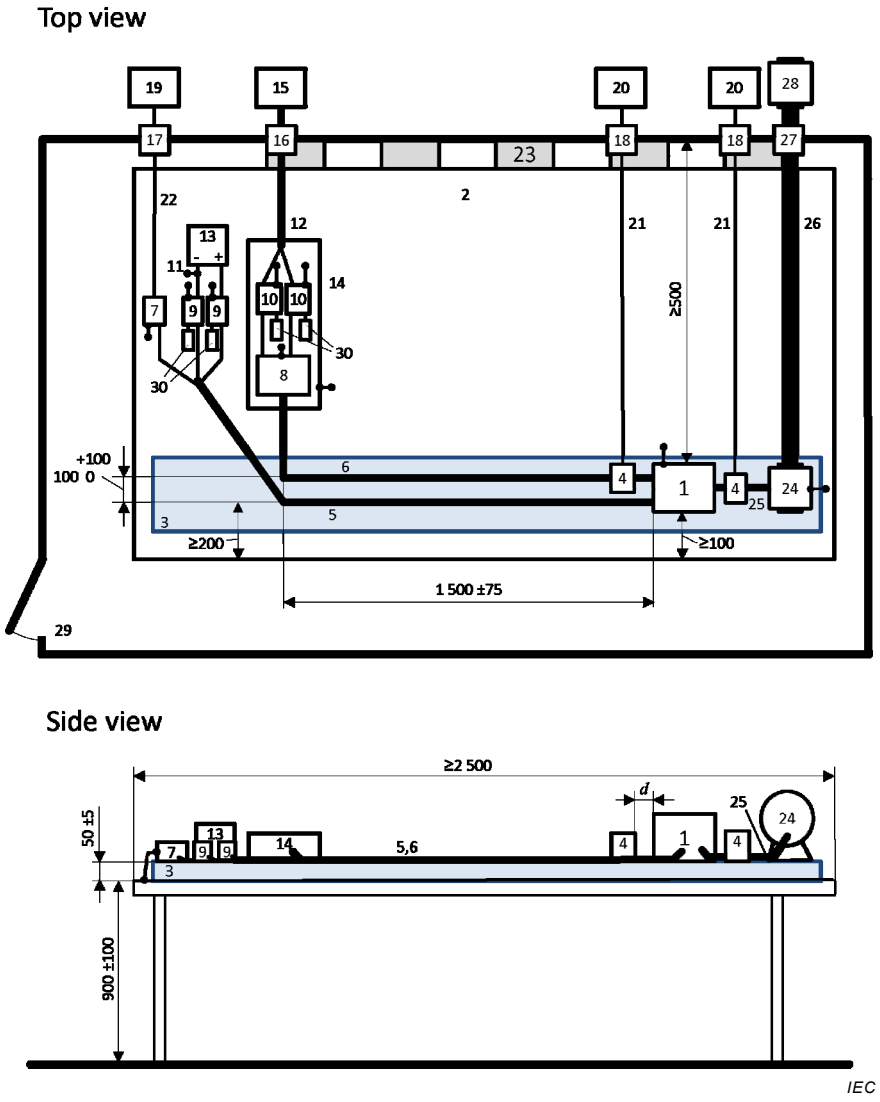

Key

1	EUT	16	Power line filter
2	Reference ground plane	17	Fibre optic feed through
3	Low relative permittivity support ($\varepsilon_r \leq 1{,}4$) thickness 50 mm (a non-conductive support can be used for the electric motor)	18	Bulk head connector
		19	Stimulating and monitoring system
		20	Measuring instrument
4	Current probe ("d" see I.3.2)	21	High quality coaxial cable e.g. double shielded (50 Ω)
5	LV harness		
6	HV lines (HV+, HV-)	22	Optical fibre
7	LV load simulator	23	Ground straps (see 6.2.1)
8	Impedance matching network (optional)	24	Electric motor
9	LV AN	25	Three phase motor supply lines
10	HV AN	26	Mechanical connection (e.g. non-conductive)
11	LV supply lines	27	Filtered mechanical bearing
12	HV supply lines	28	Brake or propulsion motor
13	LV power supply 12 V / 24 V / 48 V (should be placed on the reference ground plane)	29	Shielded enclosure
		30	50 Ω load
14	Additional shielded box		
15	HV power supply (should be shielded if placed inside the shielded enclosure		

NOTE The electric motor, mechanical connection, filtered mechanical bearing and brake or propulsion motor can be replaced by a load machine emulation.

Figure I.5 – Conducted emission – Example of test setup current probe measurement on HV lines for EUTs with shielded power supply systems with electric motor attached to the bench

Dimensions in millimetres – not to scale

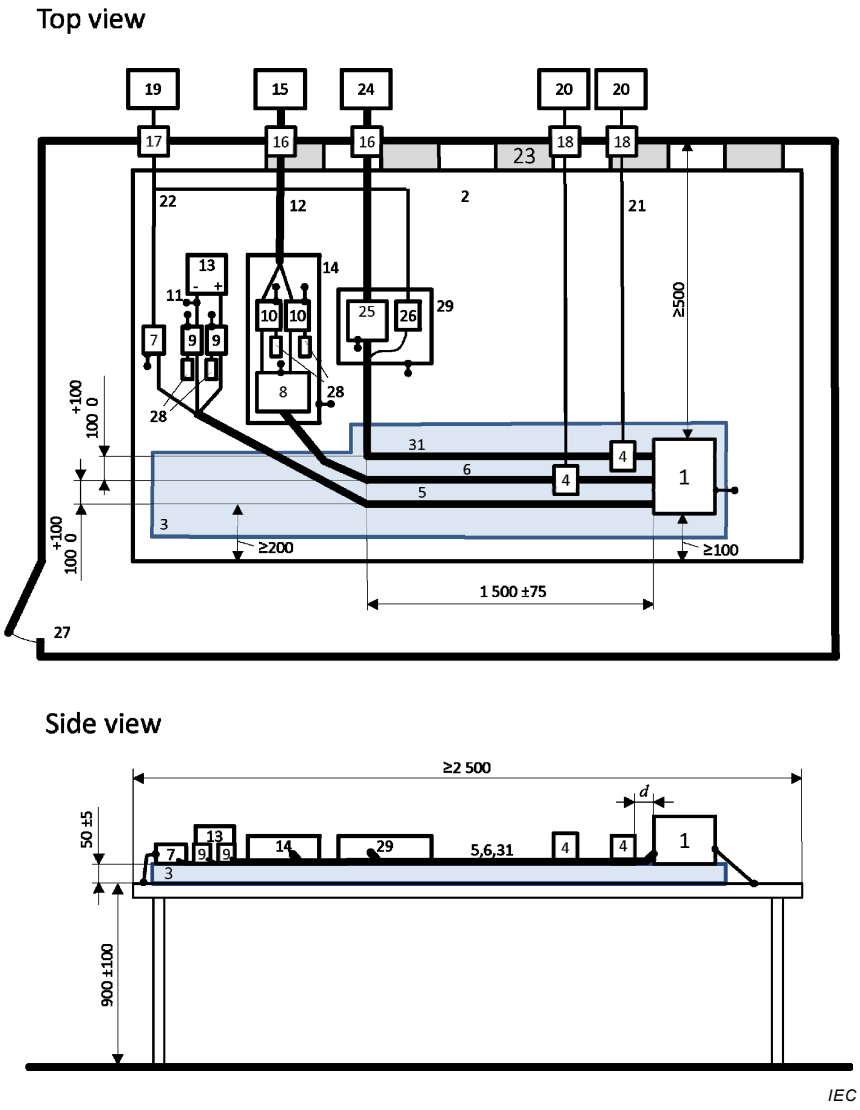

Key

1	EUT
2	Reference ground plane
3	Low relative permittivity support ($\varepsilon_r \leq 1{,}4$) thickness 50 mm
4	Current probe ("d" see I.3.2)
5	LV harness
6	HV lines (HV+, HV−)
7	LV load simulator
8	Impedance matching network (optional)
9	LV AN
10	HV AN
11	LV supply lines
12	HV supply lines
13	LV power supply 12 V / 24 V / 48 V (should be placed on the reference ground plane)
14	Additional shielded box
15	HV power supply (should be shielded if placed inside the shielded enclosure)
16	Power line filter
17	Fibre optic feed through
18	Bulk head connector
19	Stimulating and monitoring system
20	Measuring instrument
21	High quality coaxial cable e.g. double shielded (50 Ω)
22	Optical fibre
23	Ground straps (see 6.2.1)
24	AC power mains
25	AMN for AC power mains
26	AC charging load simulator
27	Shielded enclosure
28	50 Ω load
29	Additional shielded box (optional)
31	AC lines

Figure I.6 – Conducted emission – Example of test setup current probe measurement on HV lines for EUTs with shielded power supply systems and inverter/charger device

I.3.3 Limits for conducted emission – current probe method

For limits see Table 6.

I.4 Radiated emissions from components/modules – ALSE method

I.4.1 Reference ground plane arrangement

The location of the EUT, the test harness and the load simulator on the reference ground plane are shown in Figure I.7, Figure I.8 and Figure I.9.

I.4.2 Test setup

The set-up is adapted from 6.5.2 and is shown in Figure I.7. The shielding configuration and any protective ground connection should be representative of the vehicle application and shall be defined in the test plan. The battery charger ground connection shall also be defined in the test plan.

Unless otherwise specified in the test plan (e.g. use of original vehicle harnesses), the length of harnesses shall be as follows:

- $1\,700\,^{+300}_{0}$ mm for the LV lines,
- $1\,700\,^{+300}_{0}$ mm for the HV lines and the length of the HV test harness parallel to the front of the reference ground plane shall be (1 500 ± 75) mm,
- not larger than 1 000 mm for the three phase lines between EUT and electric motor(s).

Unless physically impossible, all of the harnesses shall be placed on a non-conductive, low relative permittivity material ($\varepsilon_r \leq 1{,}4$), at (50 ± 5) mm above the reference ground plane. The long segment of LV lines test harness shall be located parallel to the edge of the reference ground plane facing the antenna at a distance of (100 ± 10) mm from the edge. The long segment of the HV lines test harness shall be located at $100\,^{+100}_{0}$ mm from the LV lines test harness (as shown in Figure I.7, Figure I.8 and Figure I.9).

Unless otherwise specified in the test plan, the configuration with the long segment of HV lines test harness at a distance of (100 ± 10) mm from the edge and the LV lines test harness located at $100\,^{+100}_{0}$ mm from the HV lines shall also be tested.

The shielded harnesses used for this test shall be representative of the vehicle application in terms of cable construction and connector termination as defined in the test plan.

Unless otherwise specified in the test plan, the EUT case shall be connected to the reference ground plane either directly or via defined impedance.

Figure I.8 shows a more complex configuration adding an electric motor or load machine emulation to the setup, e.g. in case the EUT is an electric power unit. The electric motor housing shall be bonded to the ground plane, if applicable.

In case of using a load machine emulation

- the test plan shall define the connection conditions between the EUT and the load machine emulation and also the necessary grounding conditions,
- the load machine emulation will replace the “electric motor”, the “mechanical connection”, the “filtered mechanical bearing” and the “brake or propulsion motor”.

The three phase supply lines will be fed through a power line filter.

The electric motor may be placed on a separate ground plane. In this case, the test plan shall define the connection configuration between this separate motor ground plane and the EUT ground plane (representing the vehicle grounding configuration).

NOTE 1 Depending on the mechanical bearing of the electric motor and the high frequency treatment of the axle, the motor axle may act as exit path for the high frequency noise.

The setup in Figure I.9 is an example for further HV and LV load simulators and supplies attached to the EUT, like e.g. for testing an on-board charger and its communication links. The distance between the AC power lines and the closest harness (LV or HV) shall be $100\ ^{+100}_{0}$ mm. Various combinations of the shown setups are possible based on the true application of the HV component under study (EUT).

Unless otherwise specified in the test plan, for onboard chargers (see Figure I.9) the AC power lines shall be placed the furthest from the antenna (behind LV and HV harness).

NOTE 2 Care is taken when using a power line filter (item 16 of the key) on the HV supply line. This filter will increase the common mode capacitance between HV+ and ground reference or HV− and ground reference and can lead to the generation of extra resonances.

NOTE 3 Depending on the package situation in the vehicle and the material used for the chassis (e.g. metal or alternative material) the impedance of the connection of the shielding to the vehicle chassis can vary drastically.

NOTE 4 Care is taken by using a protection earth line which can influence the test result.

In this annex the test setup is shown with a biconical antenna. All other antenna types described in this document can be used for the corresponding frequency ranges and antenna configurations (e.g. rod, log-periodic, horn, etc.).

Dimensions in millimetres – not to scale

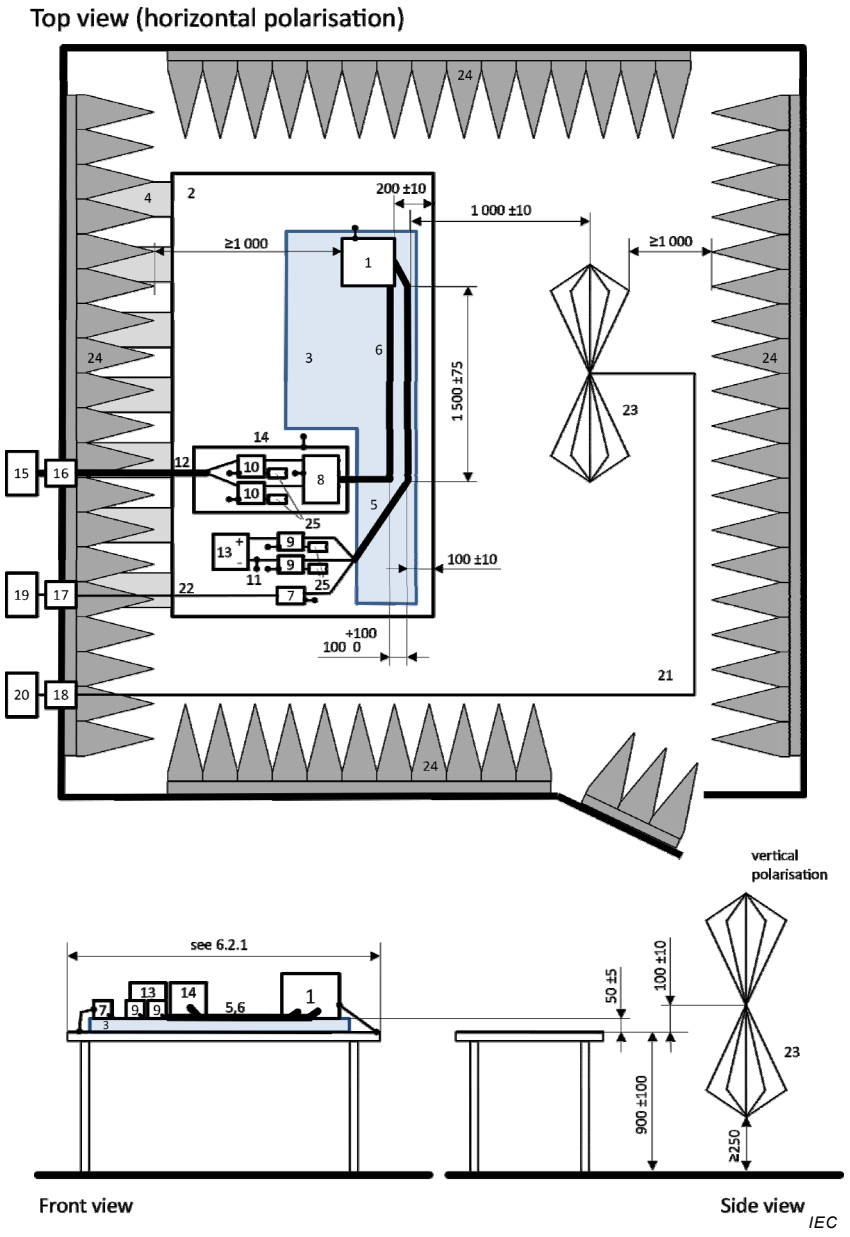

Key

1 EUT
2 Reference ground plane
3 Low relative permittivity support ($\varepsilon_r \leq 1{,}4$) thickness 50 mm
4 Ground straps (see 6.2.1)
5 LV harness
6 HV lines (HV+, HV−)
7 LV load simulator
8 Impedance matching network (optional)
9 LV AN
10 HV AN
11 LV supply lines
12 HV supply lines
13 LV power supply 12 V / 24 V / 48 V (should be placed on the reference ground plane)
14 Additional shielded box
15 HV power supply (should be shielded if placed inside ALSE)
16 Power line filter
17 Fibre optic feed through
18 Bulk head connector
19 Stimulating and monitoring system
20 Measuring instrument
21 High quality coaxial cable e.g. double shielded (50 Ω)
22 Optical fibre
23 Biconical antenna
24 RF absorber material
25 50 Ω load

Figure I.7 – Radiated emission – Example of test setup measurement with biconical antenna for EUTs with shielded power supply systems

Dimensions in millimetres – not to scale

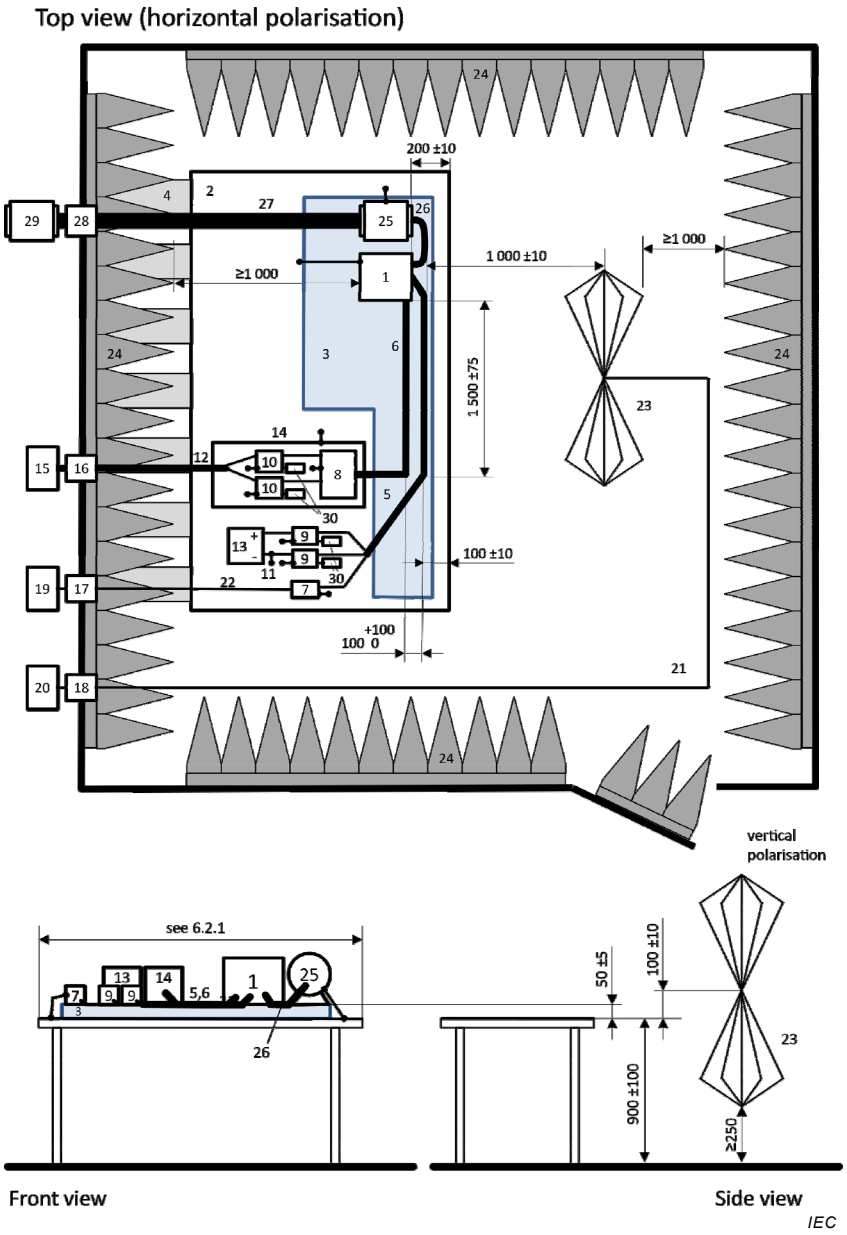

NOTE The electric motor, mechanical connection, filtered mechanical bearing and brake or propulsion motor can be replaced by a load machine emulation.

Key

1	EUT
2	Reference ground plane
3	Low relative permittivity support ($\varepsilon_r \leq 1{,}4$) thickness 50 mm (a non-conductive support can be used for the electric motor)
4	Ground straps (see 6.2.1)
5	LV harness
6	HV lines (HV+, HV−)
7	LV load simulator
8	Impedance matching network (optional)
9	LV AN
10	HV AN
11	LV supply lines
12	HV supply lines
13	LV power supply 12 V / 24 V / 48 V (should be placed on the reference ground plane)
14	Additional shielded box
15	HV power supply (should be shielded if placed inside the ALSE)
16	Power line filter
17	Fibre optic feed through
18	Bulk head connector
19	Stimulating and monitoring system
20	Measuring instrument
21	High quality coaxial cable e.g. double shielded (50 Ω)
22	Optical fibre
23	Biconical antenna
24	RF absorber material
25	Electric motor
26	Three phase motor supply lines
27	Mechanical connection (e.g. non-conductive)
28	Filtered mechanical bearing
29	Brake or propulsion motor
30	50 Ω load

Figure I.8 – Radiated emission – Example of test setup measurement with biconical antenna for EUTs with shielded power supply systems with electric motor attached to the bench

Dimensions in millimetres – not to scale

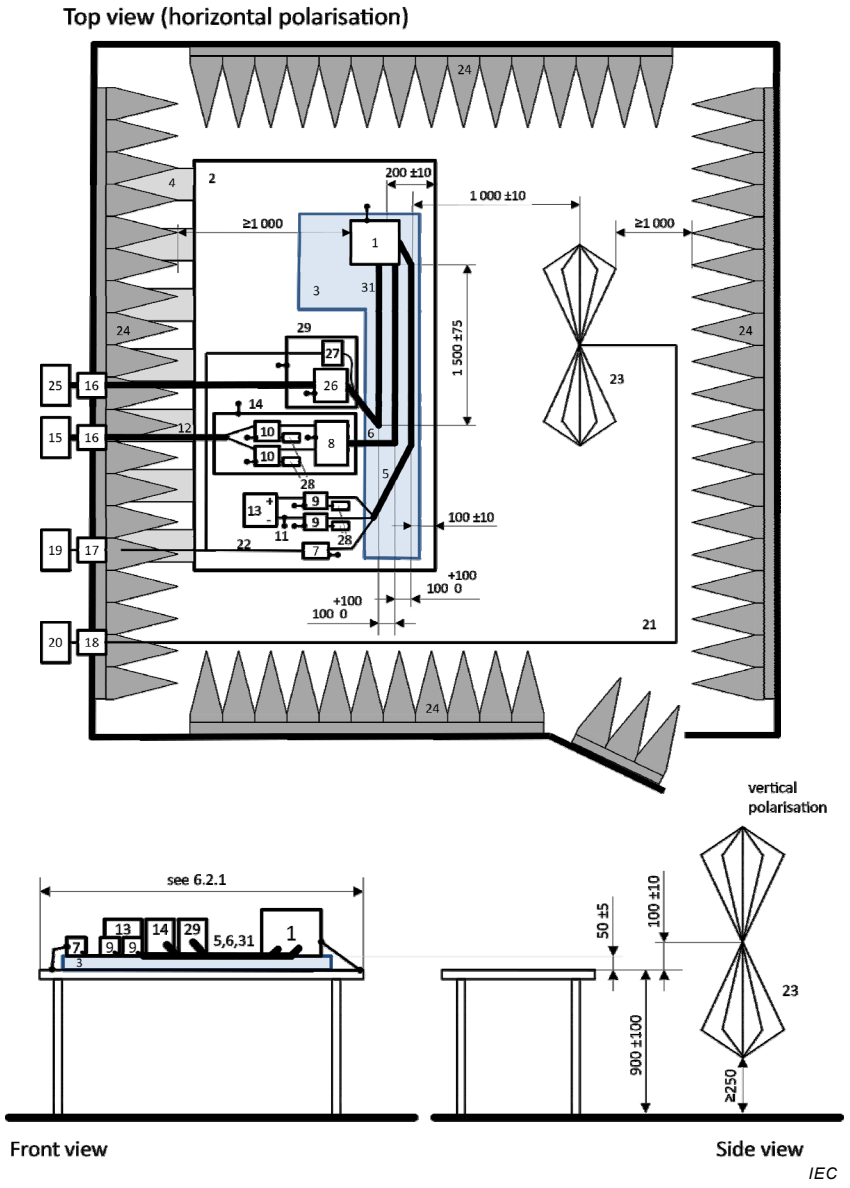

Key

1	EUT
2	Reference ground plane
3	Low relative permittivity support ($\varepsilon_r \leq 1{,}4$) thickness 50 mm
4	Ground straps (see 6.2.1)
5	LV harness
6	HV lines (HV+, HV−)
7	LV load simulator
8	Impedance matching network (optional)
9	LV AN
10	HV AN
11	LV supply lines
12	HV supply lines
13	LV power supply 12 V / 24 V / 48 V (should be placed on the reference ground plane)
14	Additional shielded box
15	HV power supply (should be shielded if placed inside ALSE)
16	Power line filter
17	Fibre optic feed through
18	Bulk head connector
19	Stimulating and monitoring system
20	Measuring instrument
21	High quality coaxial cable e.g. double shielded (50 Ω)
22	Optical fibre
23	Biconical antenna
24	RF absorber material
25	AC power mains
26	AMN for AC power mains
27	AC charging load simulator
28	50 Ω load
29	Additional shielded box (optional)
31	AC lines

Figure I.9 – Radiated emission – Example of test setup measurement with biconical antenna for EUTs with shielded power supply systems and inverter/charger device

I.4.3 Limits for radiated emissions – ALSE method

For limits see Table 7.

I.5 Coupling between HV and LV systems

I.5.1 General

In the previous subclauses HV component limits and corresponding test methods have been described. This subclause provides test methods to determine the influence of disturbances from the HV side to the LV side.

The coupling between HV and LV systems can be determined

- with measurements (voltage, current, electric field) based on the test setup as defined in I.5.2,
- with direct measurement of scattering parameters as defined in I.5.3.

The test method to be used shall be agreed between the vehicle manufacturer and the equipment supplier and documented in the test plan.

I.5.2 Measurement based on test setups defined in Clause 6

I.5.2.1 General

These test setups are based on test setups defined in Clause 6. The LV side remains unchanged. The HV side is modified. The EUT shall be in an operational mode as defined in the test plan.

In general, a test signal is injected at the HV+ and the HV− port consecutively. The test level is set to meet the specified HV limits from Table I.1 (average) as agreed between the vehicle manufacturer and the equipment supplier and documented in the test plan. Signal calibration and monitoring is mandatory.

The test signal shall be applied either by current probe or capacitive coupling. The emissions are determined using both conducted methods (voltage method and current probe method) and ALSE method.

Subclause I.5.2.2 describes the calibration procedure to ensure that the test levels on the HV side are met according to the HV limit class from Table I.1 (average). Test setups for conducted and radiated emission are described in I.5.2.3, I.5.2.4 and I.5.2.5. Coupling measurements shall be performed with all three test setups and the associated requirements.

I.5.2.2 Test signal injection and calibration

The setup for the calibration of the test signal is shown in Figure I.10. The RF power of the test signal is supplied to the coupling element between HV AN and optional impedance matching network (see E.2.2 and Figure E.5), either by injection probe (as defined in ISO 11452-4) or capacitive coupling (as defined in DCC method in ISO 7637-3). For calibration the EUT shall be unpowered.

Measure the output level at the measuring port of the HV AN. Terminate the measuring port of the other HV AN with 50 Ω. The measurement shall be performed in the frequency range from 150 kHz to 108 MHz with a bandwidth of 9 kHz using AV or PK detector. The test signal is set to the specified limit from Table I.1 (average).

Calibration of the test signal shall be performed at the HV+ and HV− ports consecutively.

NOTE The calibration can also be performed using the setup shown in Figure I.11.

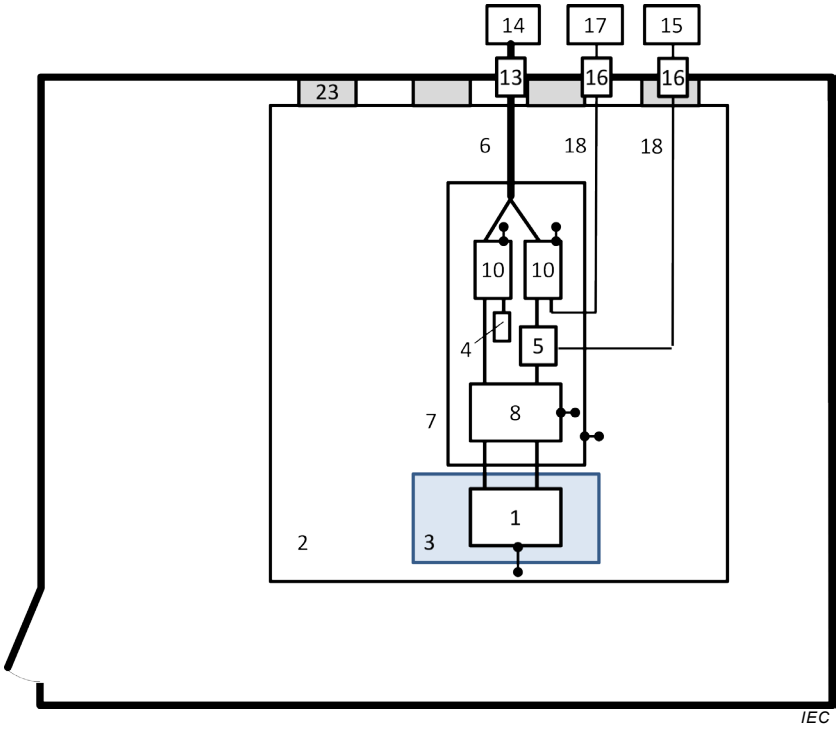

Key

1	EUT (or EUT simulator)
2	Reference ground plane
3	Low relative permittivity support ($\varepsilon_r \leq 1{,}4$) thickness 50 mm
4	50 Ω load
5	Test signal coupling element (may be current clamp or capacitor)
6	HV supply lines (HV+, HV−)
7	Additional shielded box
8	Impedance matching network (optional)
10	HV AN
13	Power line filter
14	Shielded HV power supply (may be placed inside the shielded enclosure)
15	Tracked RF test generator (may be placed inside the shielded box)
16	Bulk head connector
17	Measuring instrument
18	High quality coaxial cable e.g. double shielded (50 Ω)
23	Ground straps

Figure I.10 – Test setup for calibration of the test signal

I.5.2.3 Conducted emission – Voltage method

This method consists of measuring disturbance voltages at the LV side of the power supply. The emission level shall be measured on LV+ and LV− for each test signal injection configuration. The measured level shall not exceed the corresponding LV emission limits (same class than the one defined for HV level in I.5.2.2) defined in Table 5 (average). The setup is shown in Figure I.11. The reference ground plane conditions defined in 6.2.1 (radiated emissions) apply.

Dimensions in millimeters – not to scale

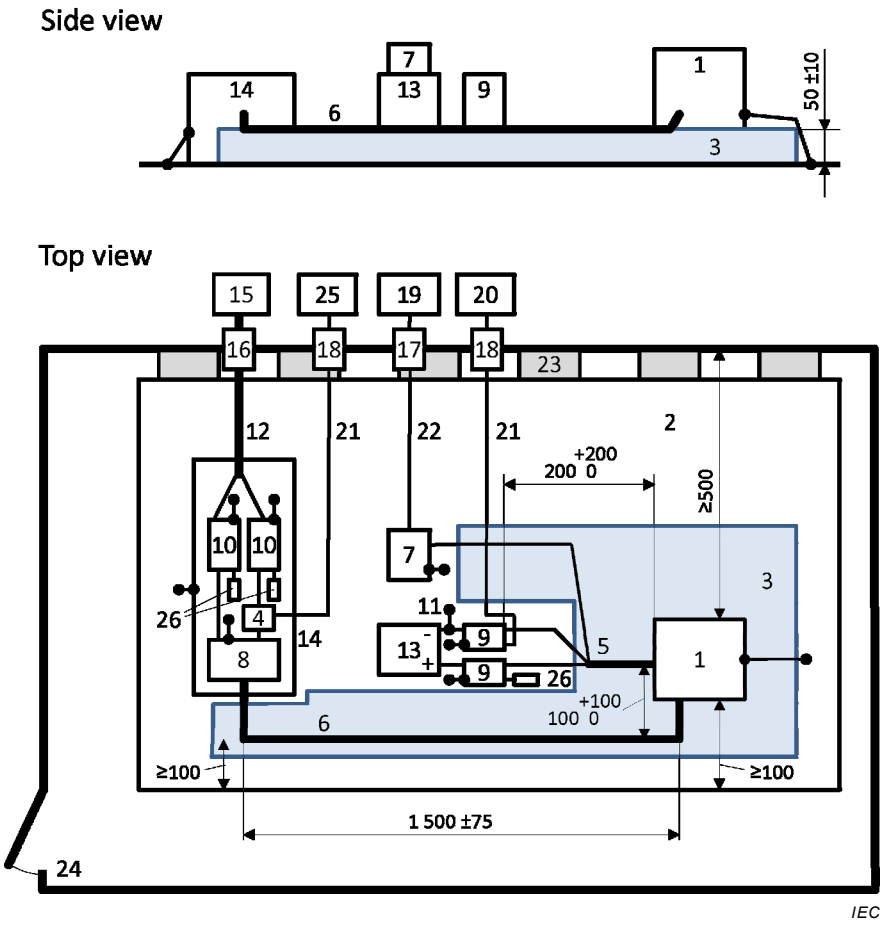

Key

1	EUT	14	Additional shielded box
2	Reference ground plane	15	HV power supply (should be shielded if placed inside the shielded enclosure)
3	Low relative permittivity support ($\varepsilon_r \leq 1{,}4$) thickness 50 mm	16	Power line filter
4	Test signal coupling element (may be current clamp or capacitor)	17	Fibre optic feed through
5	LV harness	18	Bulk head connector
6	HV lines (HV+, HV−)	19	Stimulating and monitoring system
7	LV load simulator	20	Measuring instrument
8	Impedance matching network (optional)	21	High quality coaxial cable e.g. double shielded (50 Ω)
9	LV AN	22	Optical fibre
10	HV AN	23	Ground straps (see 6.2.1)
11	LV supply lines	24	Shielded enclosure
12	HV supply lines	25	RF generator (may be placed inside the shielded box (14))
13	LV power supply 12 V / 24 V / 48 V (should be placed on the reference ground plane)	26	50 Ω load

Figure I.11 – Example of test setup for conducted emissions – Voltage method – Measurement on LV ports with injection on HV supply ports

I.5.2.4 Conducted emission – Current probe method

This method consists of measuring disturbance currents at the LV harness side. The emission level shall be measured for each test signal injection configuration. The measured level shall not exceed the corresponding LV emission limits (same class than the one defined for HV level in I.5.2.2) defined in Table 6 (average). The setup is shown in Figure I.12.

Current probe measurements have to be performed on HV+ and HV− power supply lines separately (if applicable) and together. Measure the emission with the probe positioned d = 50 mm and d = 750 mm (depending on harness length) from the EUT.

Dimensions in millimetres – not to scale

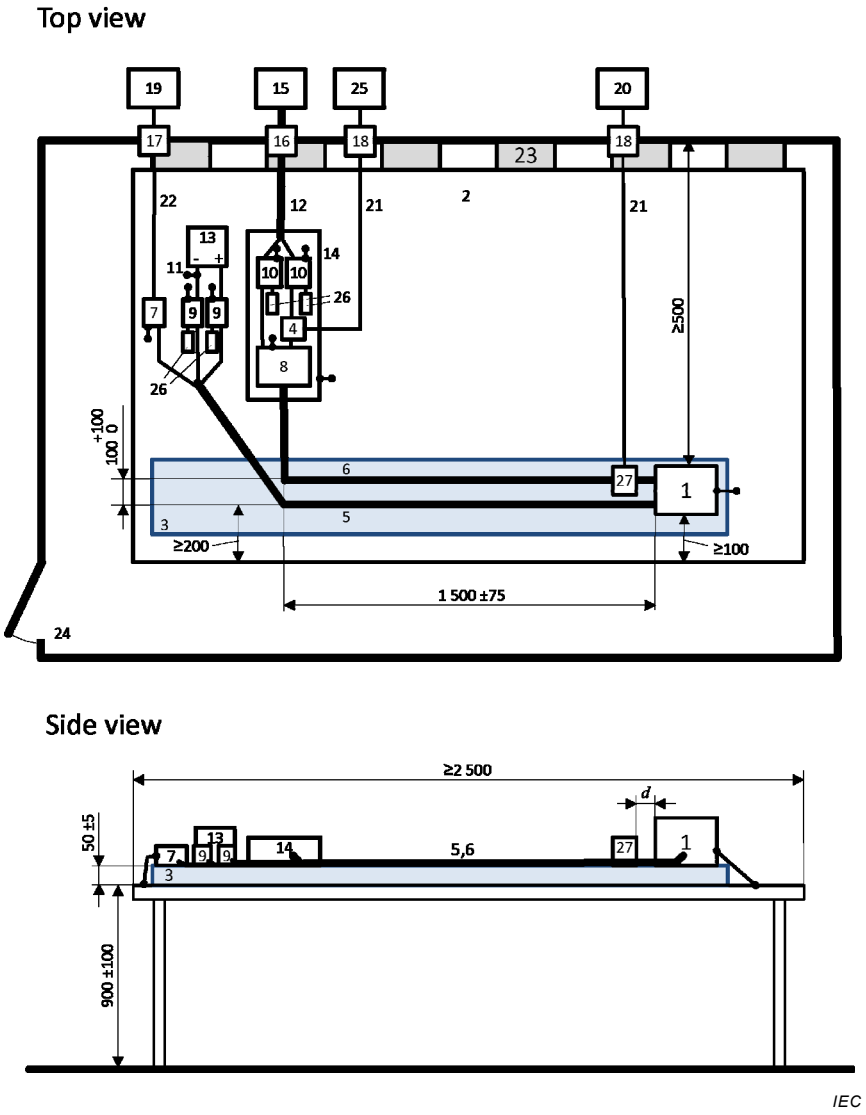

Key

1	EUT
2	Reference ground plane
3	Low relative permittivity support ($\varepsilon_r \leq 1{,}4$) thickness 50 mm
4	Test signal coupling element (may be current clamp or capacitor)
5	LV harness
6	HV lines (HV+, HV−)
7	LV load simulator
8	Impedance matching network (optional)
9	LV AN
10	HV AN
11	LV supply lines
12	HV supply lines
13	LV power supply 12 V / 24 V / 48 V (should be placed on the reference ground plane)
14	Additional shielded box
15	HV power supply (should be shielded if placed inside the shielded enclosure)
16	Power line filter
17	Fibre optic feed through
18	Bulk head connector
19	Stimulating and monitoring system
20	Measuring instrument
21	High quality coaxial cable e.g. double shielded (50 Ω)
22	Optical fibre
23	Ground straps (see 6.2.1)
24	Shielded enclosure
25	RF generator (may be placed inside the shielded box (14))
26	50 Ω load
27	Current clamp

Figure I.12 – Example of test setup for conducted emissions – Current probe method – Measurement on LV ports with injection on HV supply ports

I.5.2.5 HV-specific radiated emission test

This method consists of measuring radiated emissions from the whole setup. The emission level shall be measured for each test signal injection configuration. The measured level shall not exceed the corresponding LV emission limits (same class than the one defined for HV level in I.5.2.2) defined in Table 7 (average). The setup is shown in Figure I.13.

The antenna to be used for the measurements shall be as defined in 6.5.2.2. In this subclause the test setup is shown with a biconical antenna as an example.

Dimensions in millimetres – not to scale

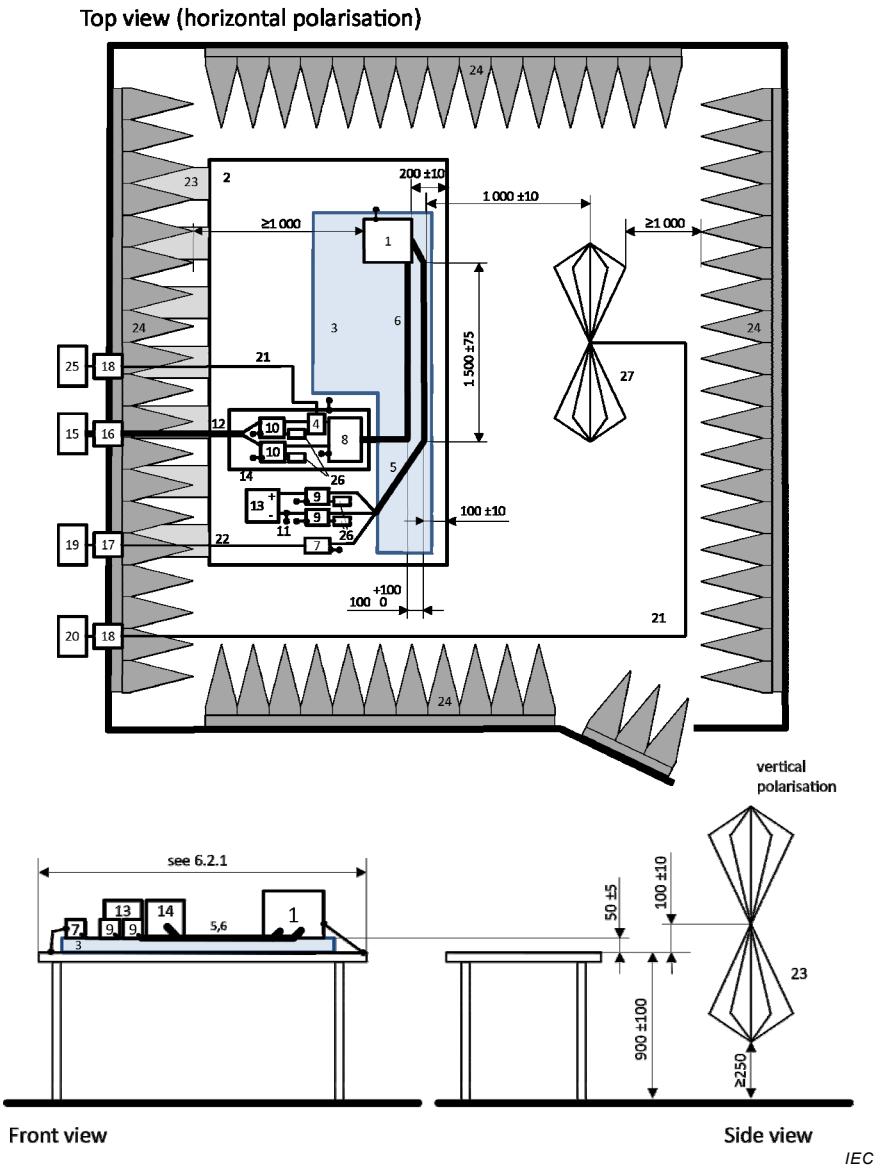

Key

1	EUT
2	Reference ground plane
3	Low relative permittivity support ($\varepsilon_r \leq 1{,}4$) thickness 50 mm
4	Test signal coupling element (may be current clamp or capacitor)
5	LV harness
6	HV lines (HV+, HV−)
7	LV load simulator
8	Impedance matching network (optional)
9	LV AN
10	HV AN
11	LV supply lines
12	HV supply lines
13	LV power supply 12 V / 24 V / 48 V (should be placed on the reference ground plane)
14	Additional shielded box
15	HV power supply (should be shielded if placed inside ALSE)
16	Power line filter
17	Fibre optic feed through
18	Bulk head connector
19	Stimulating and monitoring system
20	Measuring instrument
21	High quality coaxial cable e.g. double shielded (50 Ω)
22	Optical fibre
23	Ground straps (see 6.2.1)
24	RF absorber material
25	RF generator (may be placed inside the shielded box (14))
26	50 Ω load
27	Biconical antenna

Figure I.13 – Example of test setup for radiated emissions – ALSE method – Measurement with biconical antenna with injection on HV supply ports

I.5.3 Measurement of the HV-LV coupling attenuation

I.5.3.1 General

Subclause I.5.3 describes the measurement of the coupling attenuation , a_c, between high voltage DC lines and the low voltage lines of electric/electronic components.

This part provides information on how the coupling attenuation, a_c, can directly be measured.

The measurements shall be performed with a network analyser in two steps

- full-port calibration,
- measurement with the EUT unpowered.

I.5.3.2 Network analyser parameter

The following parameters should be used for a network analyser:

- power level: 0 dBm (recommended; depending on needed dynamic range, higher values may be necessary),
- minimum averaging factor: 8,
- minimum number of points (with logarithmic sweep): 401,
- maximum IF bandwidth: 1 kHz.

I.5.3.3 Calibration

A TOSM (through open short matched) calibration shall be performed including only the network analyser coaxial measuring cables (keys 5 and 6 of Figure I.14).

I.5.3.4 EUT measurement

The EUT measurement shall be performed according to Figure I.14 with the EUT unpowered (with only network analyser measuring coaxial cables and without any LV/HV lines). The coupling attenuation, a_c, is obtained from the network analyser scattering parameter S_{21} using the relationship $a_C = -S_{21}$.

The EUT is placed on an insulating support (50 ± 5) mm above the reference ground plane.

Unless otherwise specified in the test plan the EUT case shall be bonded to the ground plane with a copper, brass, bronze or galvanized steel strap (maximum length to width ratio of 4:1). The DC resistance between the EUT case and ground plane shall not exceed 2,5 mΩ.

Care shall be taken concerning the adaptors used between the EUT terminals and the network analyser coaxial measuring cables particularly to ensure the lowest possible impedance between the coaxial measuring cable shield and the EUT case.

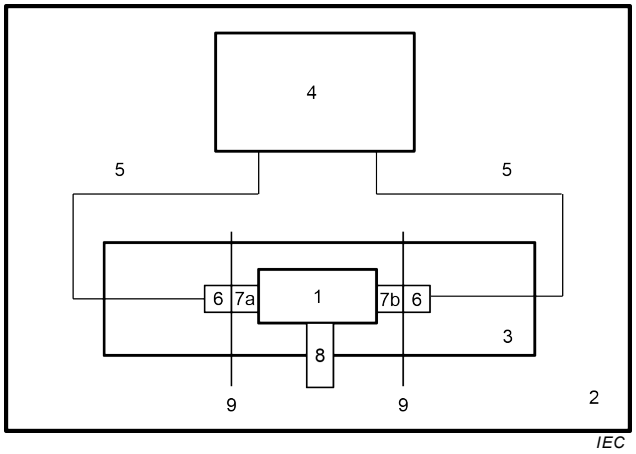

Key

1	EUT	6	Network analyser coaxial measuring cable connector
2	Ground plane	7a	HV adaptor
3	Low relative permittivity support ($\varepsilon_r \leq 1{,}4$) thickness 50 mm	7b	LV adapter
4	Network analyser	8	EUT bonding connection
5	High quality coaxial measuring cable e.g. double shielded (50 Ω)	9	Reference plane for network analyser calibration

Figure I.14 – Test setup for EUT S_{21} measurements

S_{21} measurements shall be performed for the configurations defined in Table I.2 (for equipment without negative LV line) or to Table I.3 (for equipment with negative LV line) for each HV line/LV line combination.

The test plan shall define the EUT internal configuration(s) to be tested in order to ensure that the S_{21} worst case is measured (e.g. mechanical or electronic switches state).

Table I.2 – Example of configurations for equipment without negative LV line

Measuring configuration		
	Port 1	**Port 2**
Configuration 1	Positive DC HV line	Positive LV line
Configuration 2	Negative DC HV line	Positive LV line

Table I.3 – Example of configurations for equipment with negative LV line

Measuring configuration		
	Port 1	**Port 2**
Configuration 1	Positive DC HV line	Positive LV line
Configuration 2	Negative DC HV line	Positive LV line
Configuration 3	Positive DC HV line	Negative LV line
Configuration 4	Negative DC HV line	Negative LV line

I.5.3.5 Requirement

Examples for requirements for minimum coupling attenuation $a_c = -S_{21}$ are given Table I.4 and Figure I.15.

Table I.4 – Examples of requirements for minimum coupling attenuation, a_c

Frequency MHz	Class	Minimum coupling attenuation, a_c dB
0,15 to 1 000	A1	$80 - 10 \times \lg (f_{MHz}/0,15)$
	A2	$70 - 10 \times \lg (f_{MHz}/0,15)$
	A3	$60 - 10 \times \lg (f_{MHz}/0,15)$
	A4	$50 - 10 \times \lg (f_{MHz}/0,15)$
	A5	$40 - 10 \times \lg (f_{MHz}/0,15)$

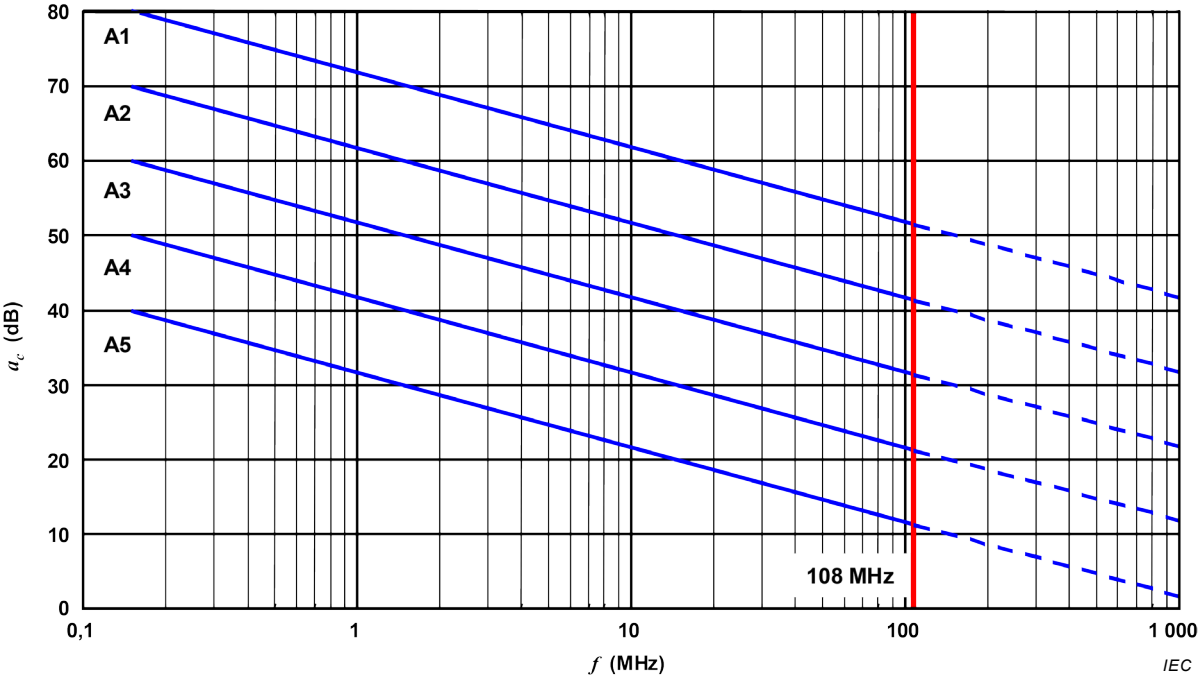

The coupling attenuation above 108 MHz is informative.

Figure I.15 – Examples of requirements for coupling attenuation, a_c

Annex J
(informative)

ALSE performance validation 150 kHz to 1 GHz

J.1 General

During a component test, the measured electric field should be characteristic of the EUT only and the impact of the ALSE should be minimized. The EUT measurement data should vary as little as possible if the measurements are performed in different ALSEs and/or at different locations. The aim of this annex is to control the effects of the ALSE. ALSEs which meet the requirements of this annex will show less deviation in EUT data.

This annex contains requirements for the validation of the ALSE used for component tests described in 6.5. This annex contains two procedures, either of which can be used for validation of the ALSE (both methods are not required). See flowchart in Figure J.2 for a visual representation of the ALSE validation process. The validation procedures are designated as follows:

Reference measurement method: This method uses a reference test site for the reference measurements. A reference test site is an OATS or alternative test site (e.g. weather-protected OATS or semi-anechoic chamber) which meets the requirements of CISPR 16-1-4:2010/AMD1:2012, 5.4.5 or 5.4.6. Reference measurements, which are similar to normalized site attenuation (NSA) measurements, are made on the reference test site with a standard ground plane (site or ALSE floor ground plane below 30 MHz, elevated 2,5 m × 1 m validation reference ground plane at 30 MHz and above). Corresponding measurements are then made in the ALSE. The reference measurements are compared to the ALSE measurements to determine if the ALSE measurements are within a defined tolerance (see J.2.4).

Modelled long wire antenna method: This method uses a 50 cm “long wire” antenna as the transmitting antenna. At frequencies below 30 MHz, the long-wire antenna was modelled using a floor (non-elevated) ground plane. At frequencies 30 MHz and above, the long-wire antenna was modelled with an elevated validation reference ground plane of a standard size (2,5 m × 1 m). Measurements are made on the long-wire antenna in the ALSE. The ALSE measurements are compared to the modelled fields in order to determine if the ALSE measurements are within a defined tolerance (see J.3.4).

Both the reference measurement method and the modelled long wire antenna method utilize a standard size validation reference ground plane for the reference measurements and modelling. At frequencies below 30 MHz, a floor (non-elevated) ground plane (e.g. the floor of an ALSE, OATS or alternative test site is the standard. The decision to use the same type of validation reference ground plane for both methods was based on the research work described in reference document [8], where a standard environment using a TEM cell was investigated, and found to give the same results as those from measurements using the floor ground plane approach. At frequencies above 30 MHz, an elevated validation reference ground plane with the dimensions of 2,5 m × 1 m is the standard. The validation reference ground plane size and grounding used during the reference measurements and modelling will be different from what a laboratory would use in the ALSE during EUT measurements. Not all ALSEs are constructed and set up identically and will therefore be different from the standardized validation reference setup in some way. The purpose of this validation procedure is to compare the standardized validation reference setup data (either measured or modelled) with the results from an ALSE used for CISPR 25 radiated emissions testing on an EUT to ensure that the deviations due to the ALSE setup differences are within a reasonable tolerance.

The ALSE configured as it is normally used during the EUT test may not initially meet the requirements specified in this annex.

The following setup parameters have a significant influence on the results obtained for chamber validation:

– reference ground plane size;
– reference ground plane bonding straps (number, size, horizontal versus vertical);
– absorber performance.

If the chamber validation requirements are not met, modifications on one or more of the previous influent parameters should help to improve the ALSE performance within the tolerance specified in this annex.

Some parameters, their specifications and tolerances defined in CISPR 25 are known to have an influence in the setup and could lead to excessive deviations. On the frequency range between 10 MHz and 100 MHz, the ground plane size, its connections and the absorbers performances, even with the CISPR specifications are the most important ones. Figure J.1 presents examples of typical influence levels of these parameters over the particular 10 MHz to 100 MHz frequency range.

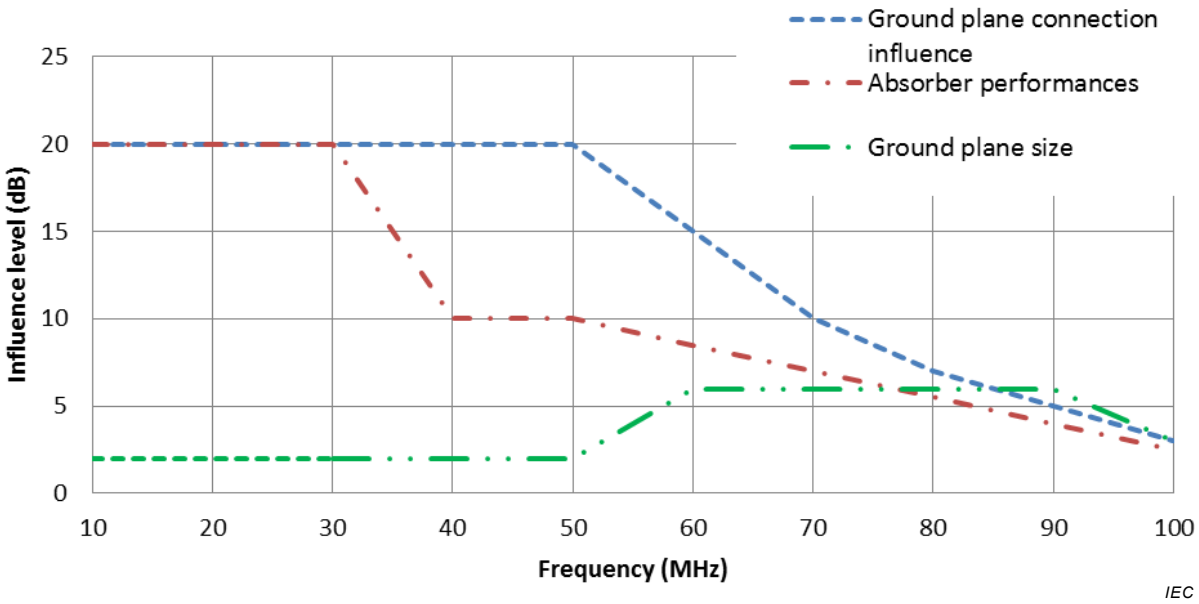

Figure J.1 – Examples of typical ALSE influence parameters over the 10 MHz to 100 MHz frequency range

NOTE 1 Between 10 MHz and 30 MHz the most important parameters are the ground plane connection and the absorbers performances. The influence of the ground plane size is more a shift in the resonances observed linked to the first previous parameters.

NOTE 2 The influence of each parameter had been evaluated individually. When mixed together their influence can be more important.

In some cases at frequencies below 30 MHz, resonances may be observed. In that case, to reduce the influence of resonance, specific methods may be used; such as applying an absorbing material (foam block absorber) between the bottom of the receiving antenna and the floor, or by bonding the counterpoise of the receiving antenna with additional bonding straps to the floor at the edge opposite to the conncection to the reference ground plane. The maximum length to width ratio for the bonding straps shall be 7:1. In the case of any modification of the standardized setup, it shall be used in the actual measurement.

The validation procedures of this annex have intentionally been limited to the frequency range of 150 kHz to 1 GHz. Studies performed during the development of this annex showed that the absorber materials and reference ground plane grounding utilized in the ALSE will generally create the largest measurement deviations at frequencies below 200 MHz.

Therefore, it was decided to limit the chamber validation upper frequency to 1 GHz. Validation methods above 1 GHz are being considered in future.

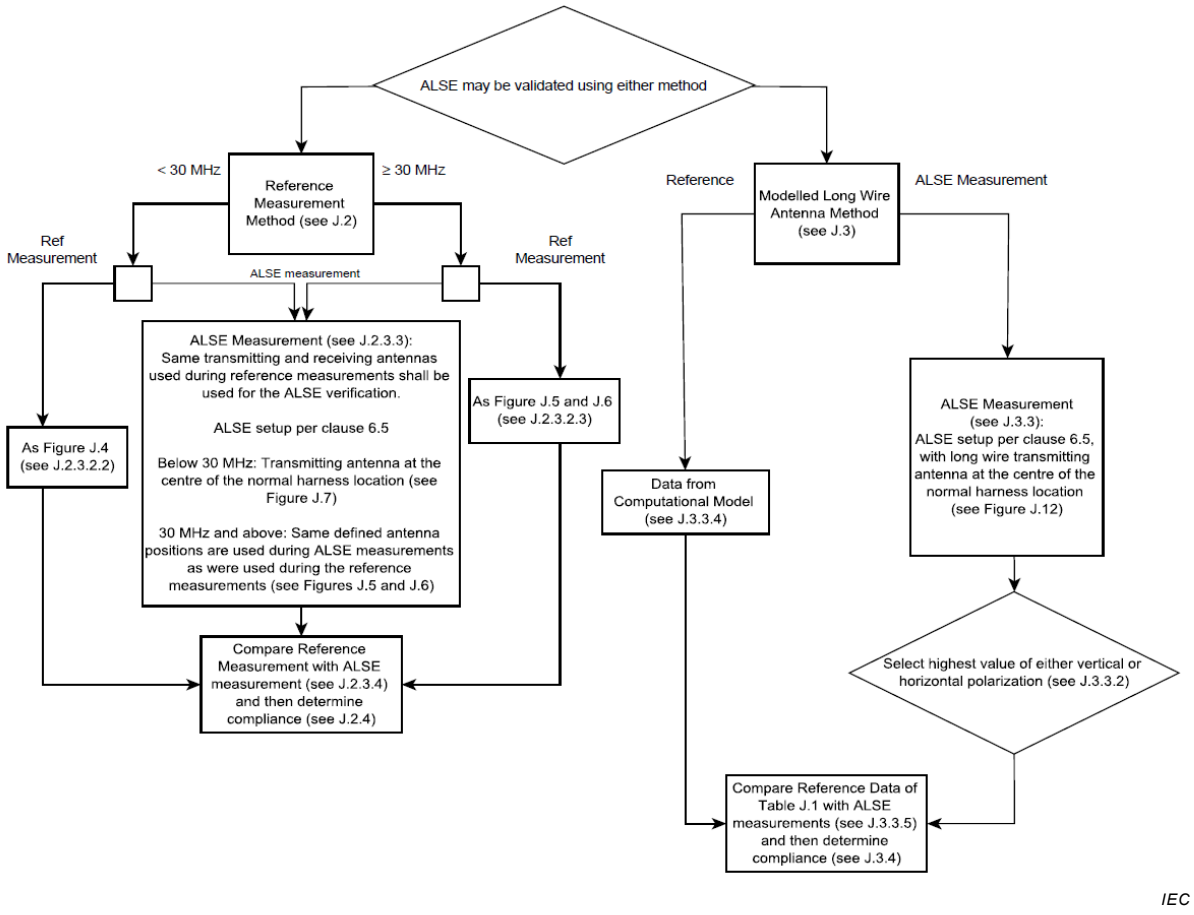

Figure J.2 – Visual representation of ALSE performance validation process

J.2 Reference measurement method

J.2.1 Overview

The validation method described below has the following aspects:

- a small monopole, biconical or shortened dipole transmitting antenna is used;
- a reference (ideal) measurement is taken in an open area test site (or similar) environment with a standardized setup that differs from the setup used in the ALSE that is to be evaluated as defined in J.2.3.2 (see Clause J.1 for more information);
- an ALSE measurement is taken with the setup as described in 6.5;
- the deviation of the reference and ALSE measurements are to be within a defined tolerance (see J.2.4).

J.2.2 Equipment

J.2.2.1 Transmission and measuring equipment

The methods in this annex define measurements of the transmission coefficient (see J.2.3.1.1) between a transmitting and receiving antenna. These measurements should be made with RF instrumentation having a nominal output or input impedance of 50 Ω. Examples include:

- a network analyser;
- a spectrum analyser or measurement receiver with a tracking generator;
- a signal generator and a spectrum analyser or measurement receiver.

J.2.2.2 Transmitting antenna

The cable connecting the transmitting antenna to the signal source may affect the verification results of the ALSE. Ferrites are to be used on the cable to minimize coupling effects. The cable should also be routed immediately towards the back of the reference ground plane, away from the receiving antenna and placed directly on the reference ground plane.

It is highly recommended that ferrites, with a minimum impedance of 50 Ω at 25 MHz and 110 Ω at 100 MHz, be placed on the transmitting and receiving antenna cables every 20 cm along its entire length within the ALSE being validated.

In the frequency range below 30 MHz, a short passive monopole transmitting antenna is used in vertical polarisation as the transmitting antenna. It should have the following characteristics:

- overall height of monopole, including drive unit <500 mm;
- monopole diameter <10 mm;
- optional top loading disc diameter <120 mm.

It is possible to construct a suitable transmitting monopole using the photographs in Figure J.3. Three ports are shown on this antenna base. During use as a radiator, the third port is unterminated.

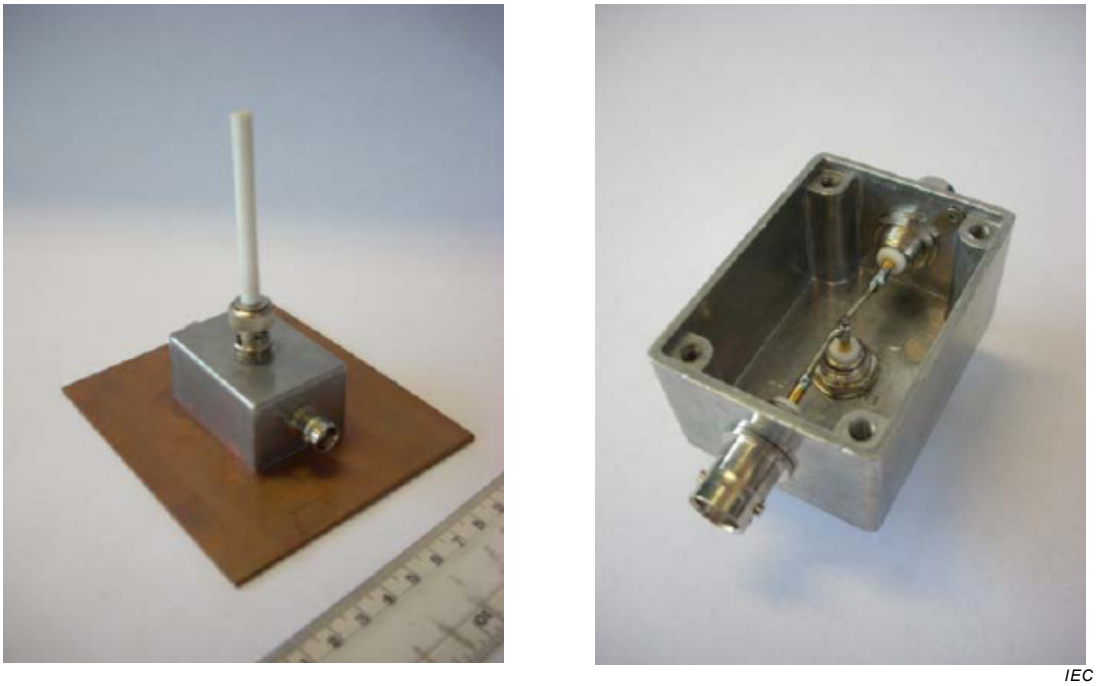

IEC

Figure J.3 – Example of construction of a transmitting monopole

In the frequency range 30 MHz and above, a small transmitting antenna (e.g. small biconical or shortened dipole) is used in the same location as the EUT harness is normally placed during component measurements. Verification measurements are made in horizontal and vertical polarisation. The maximum dimension (tip to tip) of the small transmitting antenna shall be ≤40 cm.

NOTE 2 Care is taken to use the same element orientation for both the reference and validation testing.

J.2.2.3 Receiving antenna

The receiving antenna used is the same as described in 6.5. Because relative measurements are performed, the antenna factors of the transmitting and receiving antenna do not need to be considered.

The transmitted power should be chosen such that an overload condition does not occur in the measurement system. This can be verified by reducing the transmitted power by 10 dB and verifying that the transmission coefficient does not vary.

J.2.3 Procedure

J.2.3.1 General requirements

J.2.3.1.1 Transmission coefficient measurement

The measurements described in this annex serve the purpose to determine the transmission coefficient (C_T in dB) between the input of a transmitting antenna and the output of a receiving antenna. This includes a "direct" measurement (M_0 in dB(μV)) with the RF feed cable and receiving antenna cable connected directly together. A separate measurement (M_A in dB(μV)) is then made with the RF feed cable connected to the transmitting antenna and the receiving antenna cable connected to the receiving antenna. The transmission coefficient is then calculated as follows:

$$C_T = M_A - M_0 \quad \text{(J.1)}$$

NOTE 1 The magnitude of an S_{21} network analyser measurement that has a valid "thru" calibration has the same value as C_T.

NOTE 2 C_T has the same magnitude, but an opposite sign to insertion loss.

J.2.3.1.2 Frequency step size

The frequencies to be used for the measurements are given in Table J.1. The same frequencies shall be used for the reference and ALSE measurements. A total of 481 frequencies shall be used during the measurements. 150 frequencies from 150 kHz to 29,95 MHz (step size: 200 kHz), 170 frequencies from 30 MHz to 199 MHz (step size: 1 MHz), and 161 frequencies from 200 MHz to 1 000 MHz (step size: 5 MHz).

J.2.3.1.3 Noise floor

An initial "noise floor" transmission coefficient measurement shall be made. For this measurement the receiving antenna shall be connected to the test instrumentation, but the transmitting antenna will be disconnected from the RF feed cable. All subsequent transmission measurements shall be made with the same measurement instrumentation settings (e.g. transmitted power level, resolution bandwidth, video bandwidth, detector, input attenuation, etc.) and shall be at least 10 dB above the level measured in this "noise floor" measurement.

J.2.3.2 Reference measurements

J.2.3.2.1 General

A reference transmission coefficient measurement ($C_{T\ Reference}$) shall be made with the antennas setup as shown in Figure J.4, Figure J.5 and Figure J.6.

J.2.3.2.2 Reference measurements below 30 MHz

Because the decay of the electric field at these frequencies in the vicinity of the monopole is proportional to $1/r^3$, it is permissible in the following circumstances to use the conductive floor (non-elevated ground plane) of an ALSE, instead of an OATS, to make the reference measurement. If the floor is covered with some type of material (e.g. floor tiles or carpeting), then a minimum 1,5 m × 1 m ground surface is placed on and grounded to the ALSE floor (DC resistance ≤2,5 mΩ). The transmitting and receiving monopole antenna counterpoises are bonded to the conductive floor or ground surface during the reference measurements in an ALSE and/or OATS. If a receiving monopole antenna with elevated counterpoise is used, then the counterpoise shall be grounded to the floor at the front of the counterpoise nearest the transmitting monopole antenna (for the entire width of the counterpoise) with a maximum DC resistance of 2,5 mΩ. When the reference measurements are performed in an ALSE, then the following sequence applies.

a) With the monopole antennas on the grounded floor surface, at least three transmission coefficient reference measurements shall be made with each measurement having the pair of antennas moved more than 0,3 m from any other measurement position.

b) If the difference (Δ) of the three reference measurements is less than 2 dB, any one of them can be used as the reference measurement.

c) If the difference (Δ) of the three reference measurements is greater than 2 dB, then the ALSE site cannot be used for the reference measurements. The reference measurements shall then be made at a different site (ALSE and/or OATS) which meets the conditions of b)

Dimensions in millimetres

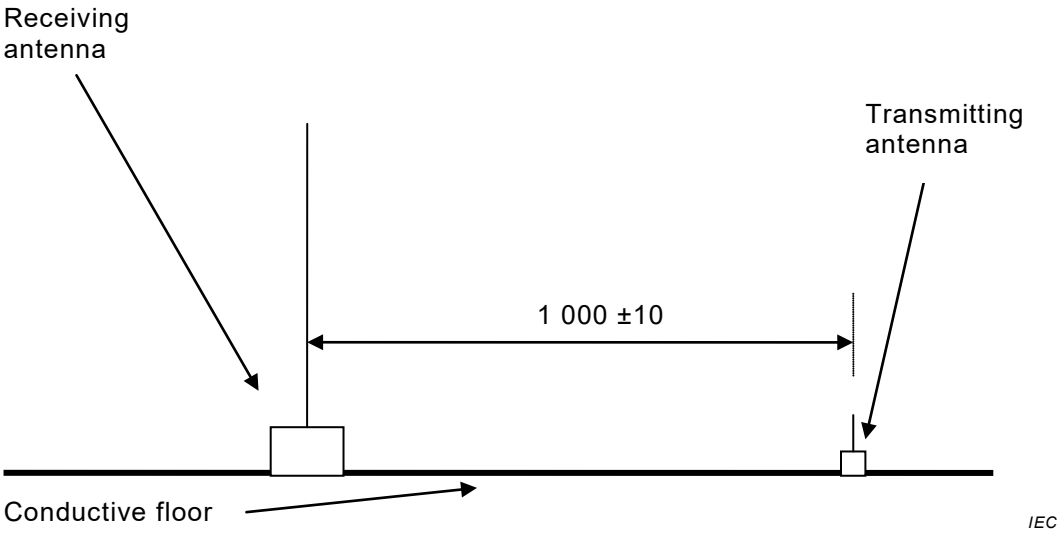

Figure J.4 – Side view of the antenna configuration for reference measurement below 30 MHz

J.2.3.2.3 Reference measurements from 30 MHz to 1 GHz

The reference measurements from 30 MHz to 1 GHz shall be carried out on a reference test site. A reference test site is an OATS or alternative test site (e.g. weather-protected OATS or semi-anechoic chamber) which meets the requirements of CISPR 16-1-4:2010/AMD1:2012, 5.4.5 or 5.4.6 respectively.

An elevated validation reference ground plane (see 3.25) is required for the reference measurements from 30 MHz to 1GHz. The elevated validation reference ground plane shall have a standard dimension of 2,5 m × 1 m and is bonded to the reference test site ground

plane floor surface. Grounding of the elevated validation reference ground plane to the reference test site ground plane shall be achieved by using a single strap with a width of $100\ ^{+100}_{0}$ mm which is centred on the centre point of the rear length of the validation reference ground plane (see Figure J.13 for a drawing of the validation reference ground plane and the single strap grounding). The bond between the validation reference ground plane and the reference test site ground plane should be less than 2,5 mΩ. The 2,5 m × 1 m elevated validation reference ground plane is a standard size that is used for all reference measurements. This is not necessarily the same reference ground plane which is used during EUT testing and the ALSE measurements of J.2.3.3 (see Clause J.1 for more information). The transmitting and receiving antennas shall remain in one location (centred on the centre point of the elevated reference ground plane) for all measurements.

Dimensions in millimetres

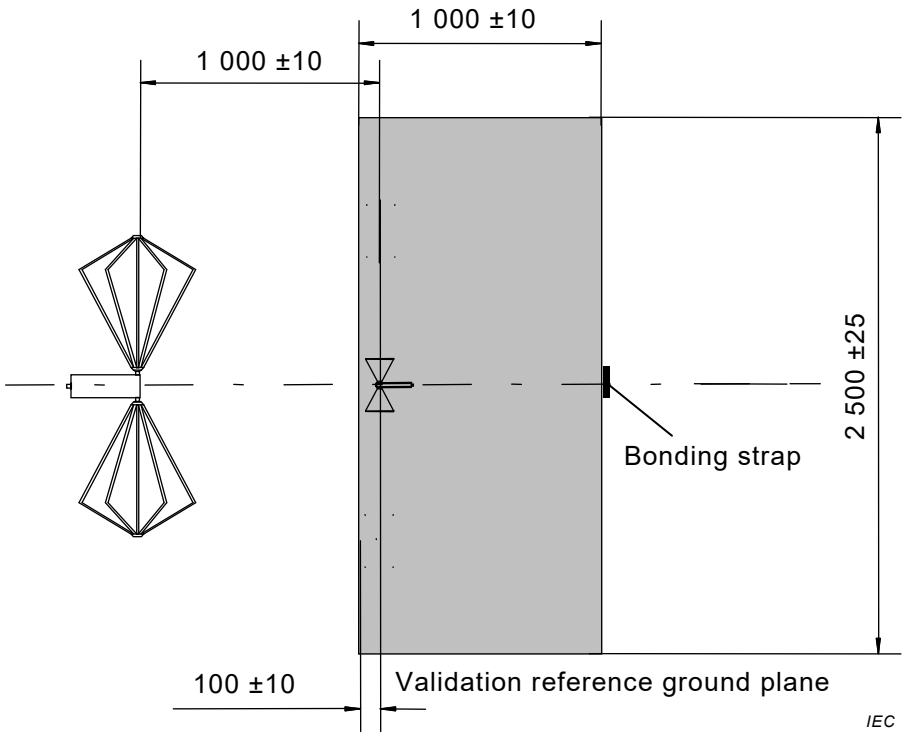

Figure J.5 – Top view of antenna configuration for reference measurement 30 MHz and above (with the biconical antenna shown as example)

Dimensions in millimetres

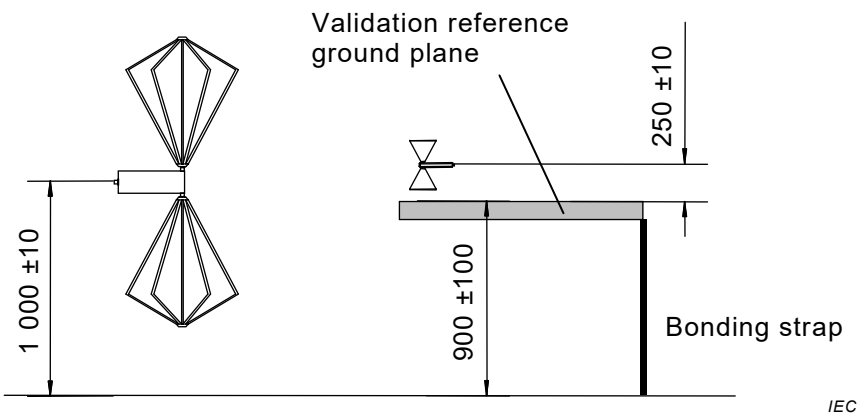

Figure J.6 – Side view of antenna configuration for reference measurement 30 MHz and above (with the biconical antenna shown as example)

J.2.3.3 ALSE measurements

The ALSE transmission coefficient ($C_{\text{T ALSE}}$) measurements shall be carried out with the same ALSE configuration (physical layout, reference ground plane size, reference ground plane grounding, RF absorber, etc.) that will be used during measurements of an EUT. It also includes the connection between antenna counterpoise and table for monopole antenna measurements below 30 MHz.

NOTE The battery and AN(s) will not be part of the validation setup and therefore are not placed on the elevated reference ground plane during the ALSE validation.

At frequencies below 30 MHz, the transmitting antenna shall be positioned directly on the reference ground plane at the position where the centre of the test harness would normally be opposite the receiving antenna. This is shown in Figure J.7.

Dimensions in millimetres

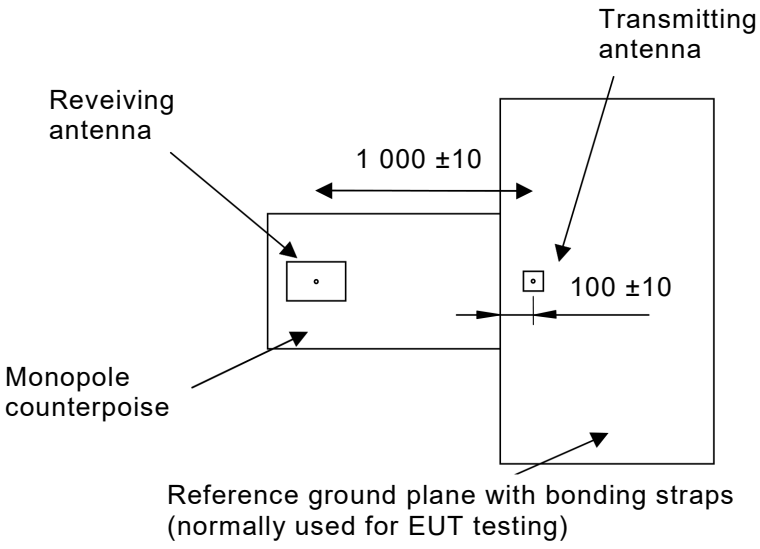

IEC

Figure J.7 – Top view of antenna configuration for the ALSE measurement below 30 MHz

At 30 MHz and above, the transmitting antenna shall be positioned as in the reference measurements. This is shown in Figure J.5 and Figure J.6. The transmitting and receiving antennas shall remain in one location (centred on the centre point of the ALSE reference ground plane) for all measurements.

J.2.3.4 Deviation of the ALSE measurement and reference data

At frequencies below 30 MHz, the reference measurement (with antennas on the ALSE floor) is compared to the ALSE (typical EUT test setup) measurement.

The delta of the measurement data obtained in J.2.3.3 from the reference data obtained in J.2.3.2 shall be calculated for each frequency below 30 MHz.

$$\Delta_{< 30\ \text{MHz}} = C_{\text{T Reference}} - C_{\text{T ALSE}}\ \Delta \quad \text{in dB} \tag{J.2}$$

At each frequency 30 MHz and above, the reference data obtained at each antenna polarisation in J.2.3.3, shall be compared to the corresponding antenna polarisation data obtained in the ALSE. This will result in two Δ data sets at 30 MHz and above:

$$\Delta_{\geq 30\ \text{MHz Vert}} = C_{\text{T Reference Vertical}} - C_{\text{T ALSE Vertical}}\ \Delta \quad \text{in dB} \tag{J.3}$$

$$\Delta_{\geq 30\ \text{MHz Horiz}} = C_{\text{T Reference Horizontal}} - C_{\text{T ALSE Horizontal}}\ \Delta \quad \text{in dB} \tag{J.4}$$

J.2.4 Requirements

To determine compliance, first calculate the % In Tolerance ($\%IT$) data points for each data set:

$$\%IT_{<30\ \text{MHz}} = \left(\frac{\text{data points of } \Delta_{<30\ \text{MHz}} \text{ within } \pm 6\ \text{dB}}{481} \right) \times 100 \tag{J.5}$$

$$\%IT_{\geq 30\ \text{MHz Vert}} = \left(\frac{\text{data points of } \Delta_{\geq 30\ \text{MHz Vert}} \text{ within } \pm 6\ \text{dB}}{481} \right) \times 100 \tag{J.6}$$

$$\%IT_{\geq 30\ \text{MHz Horiz}} = \left(\frac{\text{data points of } \Delta_{\geq 30\ \text{MHz Horiz}} \text{ within } \pm 6\ \text{dB}}{481} \right) \times 100 \tag{J.7}$$

Next, find the minimum % In Tolerance ($\%IT$) data points for the two data sets at ≥ 30 MHz:

$$\%IT_{\geq 30\ \text{MHz min}} = \min\left(\%IT_{\geq 30\ \text{MHz Vert}}, \%IT_{\geq 30\ \text{MHz Horiz}}\right) \tag{J.8}$$

Finally, calculate the total percentage of data points within the ±6 dB requirement over the entire frequency range of 150 kHz to 1 000 MHz ($Total\ \%IT_{\ 150\ \text{kHz to 1 000 MHz Ref Method}}$) by:

$$Total\ \%IT_{150\ \text{kHz to 1 000 MHz Ref Method}} = \%IT_{<30\ \text{MHz}} + \%IT_{\geq 30\ \text{MHz min}} \tag{J.9}$$

The ALSE and its installation (physical layout, reference ground plane size, reference ground plane grounding, RF absorber, etc.) is compliant with the requirements of this validation method if $Total\ \%IT_{\ 150\ \text{kHz to 1 000 MHz Ref Method}}$ is ≥ 90 %. This compliance may be included in a statement in the test report.

Note that only those frequency ranges (Table J.1) are to be evaluated in which the ALSE is used for component testing in which case the value 481 in Equation (J.5) through Equation (J.9) will be replaced by the total number of points for the reduced frequency range.

The difference between the reference and ALSE measurements will not be used

- as a correction factor for emissions measurements of an EUT, or
- to produce an antenna factor for the receiving antenna.

J.3 Modelled long wire antenna method

J.3.1 Overview

The validation method described below has the following aspects:

- a line source based on a rod between two metallic sheet angles is used in the location of the cabling harness;

- the reference values are determined through numerical simulations;
- an ALSE measurement is performed with the setup as described in 6.5,
- the reference and ALSE measurements should be similar, within a defined tolerance.

J.3.2 Equipment

J.3.2.1 Transmission and measuring equipment

Examples of transmission and measuring equipment are described in J.2.2.1.

J.3.2.2 Transmitting antenna

The cable connecting the transmitting antenna to the signal source may affect the verification results of the ALSE. Ferrites are to be used on the cable to minimize coupling effects. The cable should also be routed immediately towards the back of the reference ground plane, away from the receiving antenna and placed directly on the reference ground plane.

It is highly recommended that ferrites, with a minimum impedance of 50 Ω at 25 MHz and 110 Ω at 100 MHz, be placed on the transmitting and receiving antenna cables every 20 cm along its entire length within the ALSE being validated.

The radiation source consists of a brass rod with $(4 \pm 0{,}2)$ mm diameter located at (50 ± 2) mm height (between the ground plane and the closest point of the rod) above the ground reference plane parallel to the front edge. The horizontal distance between the edge of the ground reference plane and the rod is (100 ± 2) mm. The rod is held by two metallic sheet angles (see Figure J.8), which are separated by (500 ± 5) mm. Type-N-connectors are integrated in the angles as support for the rod. The centre of the rod is located at the same position as the centre of the cabling harness used for EUT testing.

The metallic sheet angles shall be bonded to the ground reference plane to establish a low inductive, low resistive connection between angle and ground with a maximum DC resistance of 2,5 mΩ (see Figure J.10).

It is recommended to use mounting clamps made of plastic or to screw the sheet angles directly to the ground plane.

At the load end of the radiator, the rod is terminated with a $(50 \pm 7{,}5)$ Ω RF load (max VSWR 1,2:1 over the frequency range of 150 kHz to 1 000 MHz) through the Type-N-connector mounted in the metallic sheet angle. At the RF feed end of the radiator, the rod is connected to a 10 dB, 50 Ω attenuator (max VSWR 1,2:1 over the frequency range of 150 kHz to 1 000 MHz) through the Type-N-connector mounted in the other metallic sheet angle. See Figure J.9 for a side view of the radiator and the RF terminations.

The RF feed cable is used to connect the signal source to the 10 dB, 50 Ω attenuator at the source end of the radiator using an angle connector as shown in Figure J.9.

The construction of the radiation source allows a reliable modelling for numerical calculations, which establishes the reference data. It is important that the construction of the radiation source is followed closely. Typical VSWR curves (without the 10 dB attenuator) of a properly constructed radiation source are shown in Figure J.11.

Dimensions in millimetres – not to scale

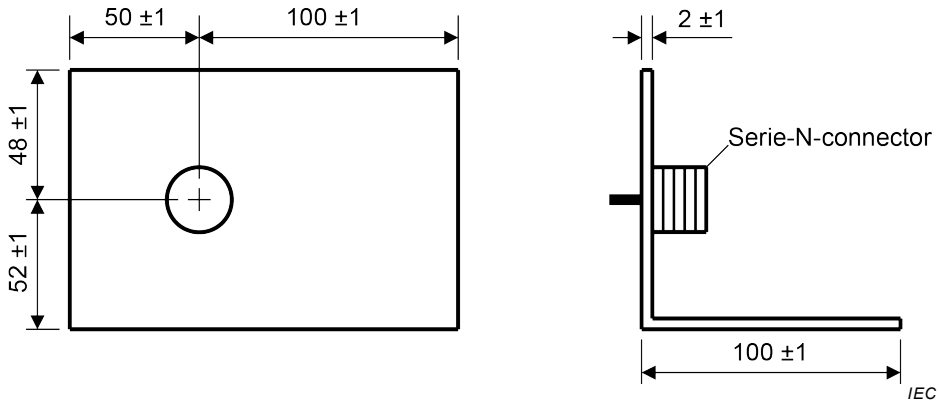

NOTE The two metallic sheet angles are mirror-inverted to each other.

Figure J.8 – Metallic sheet angles used as support for the rod

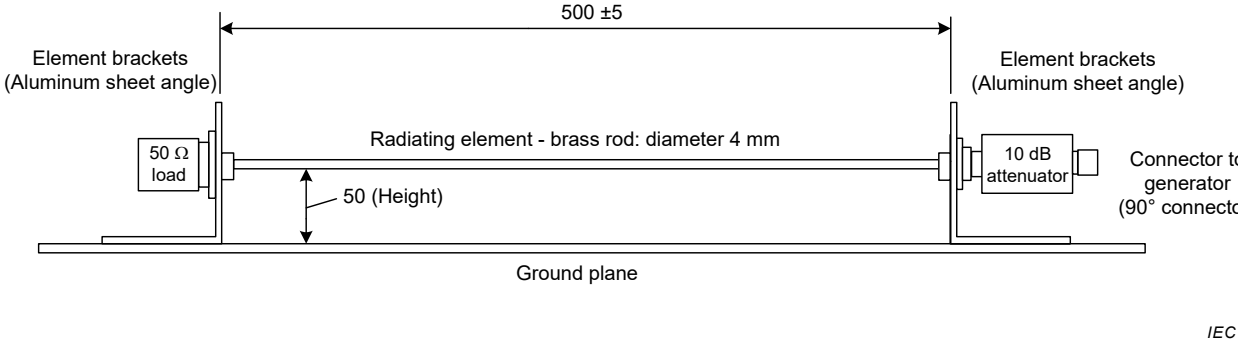

Figure J.9 – Radiator side view 50 Ω terminations

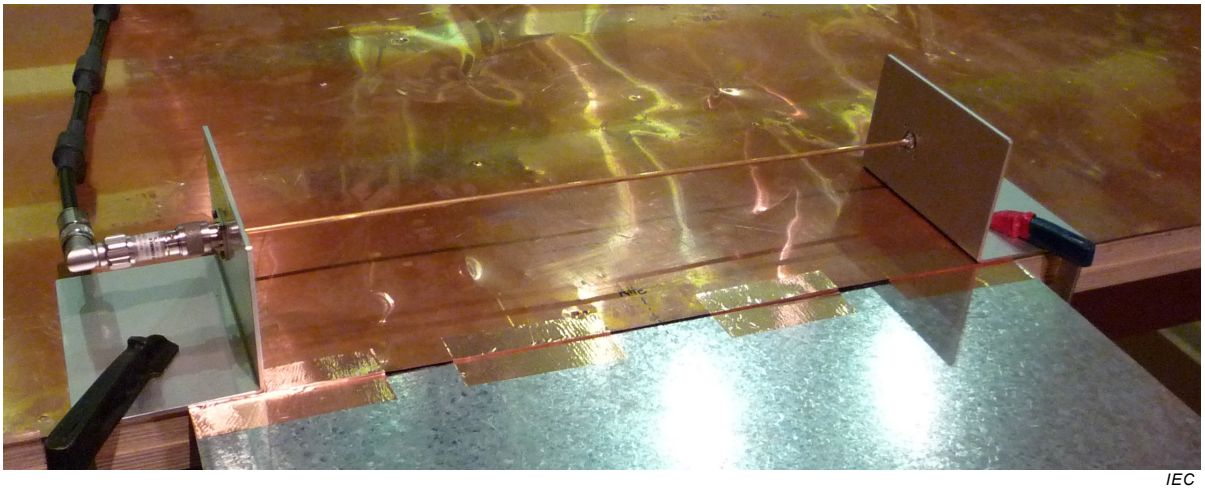

Figure J.10 – Photo of the radiator mounted on the ground reference plane

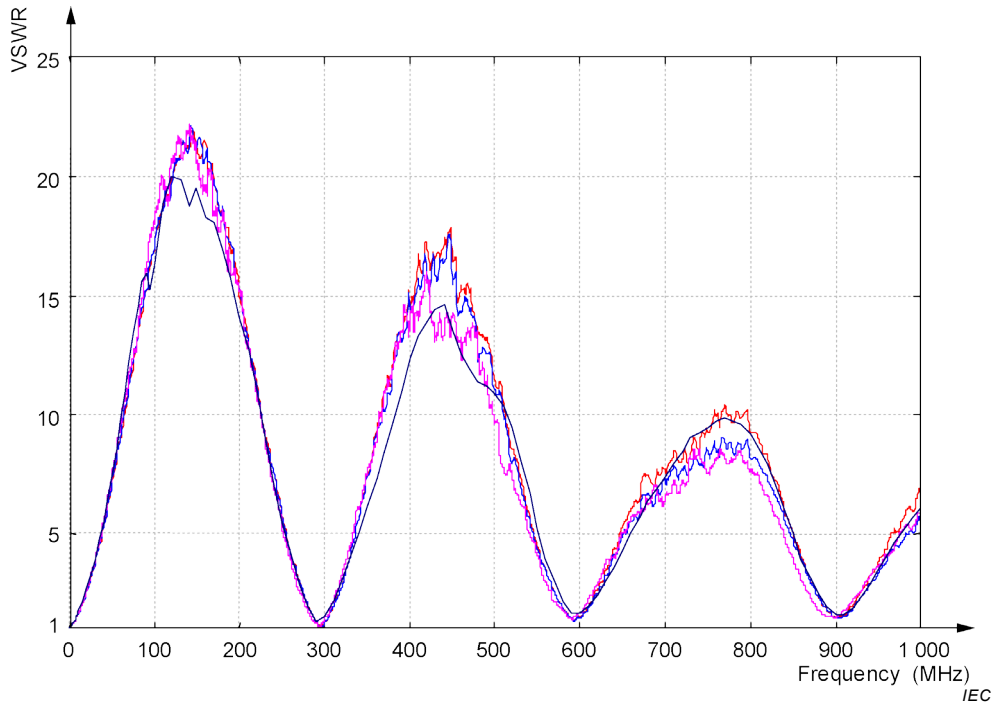

Figure J.11 – Example VSWR measured from four radiation sources (without 10 dB attenuator)

J.3.2.3 Receiving antenna

The receiving antennas used are the same as described in 6.5. The antenna factor(s) shall be known and considered in the calculations below.

The transmitted power should be chosen so that an overload condition does not occur in the measurement system. This can be verified by reducing the transmitted power by 10 dB and checking that the received power is also reduced by 10 dB.

J.3.2.4 ALSE configuration

The measurements shall be carried out with the same ALSE configuration (physical layout, reference ground plane size, reference ground plane grounding, RF absorber, etc.) that will be used during measurements of a EUT. This also includes the connection between antenna counterpoise and table for monopole antenna measurements.

NOTE The battery and AN(s) will not be part of the validation setup and therefore are not placed on the elevated reference ground plane during the ALSE validation.

J.3.3 Procedure

J.3.3.1 Frequency step size

The frequency step size requirements are described in J.2.3.1.2.

J.3.3.2 ALSE equivalent field strength measurements

An initial “direct” measurement is made with the radiator feed cable directly connected to the receiving antenna output cable. The amplitude of signal generation equipment is set to deliver 1 V rms (120 dB(μV)). The reading of the receiving instrument is recorded as quantity M_0 in dB(μV).

Since the difference between the initial measurement M_0 and the measurement M_A is calculated in Equation (J.10) the absolute value of the generator output will not directly influence the result. However, it is recommended to use the level of 1 V to obtain sufficient measurement dynamic range. For the measurement of the transmission coefficient, the radiator feed cable is connected to the input of the 10 dB attenuator and the antenna cable is connected to the receiving antenna (see Figure J.12). Again the amplitude of signal generation equipment is set to deliver 1 V rms (120 dB(μV)) to the input of the 10 dB attenuator. The reading of the receiving instrument is recorded as quantity M_A in dB(μV).

If a network analyser is used, the “direct” measurement is replaced by a full two-port calibration with the end of the radiator RF feed cable and the end of the antenna cable defining the reference plane. When using a network analyser, the amplitude of signal generation equipment may be set to a value lower than 1 V rms (120 dBμV) to fulfill the noise floor requirement.

Dimensions in millimetres – not to scale

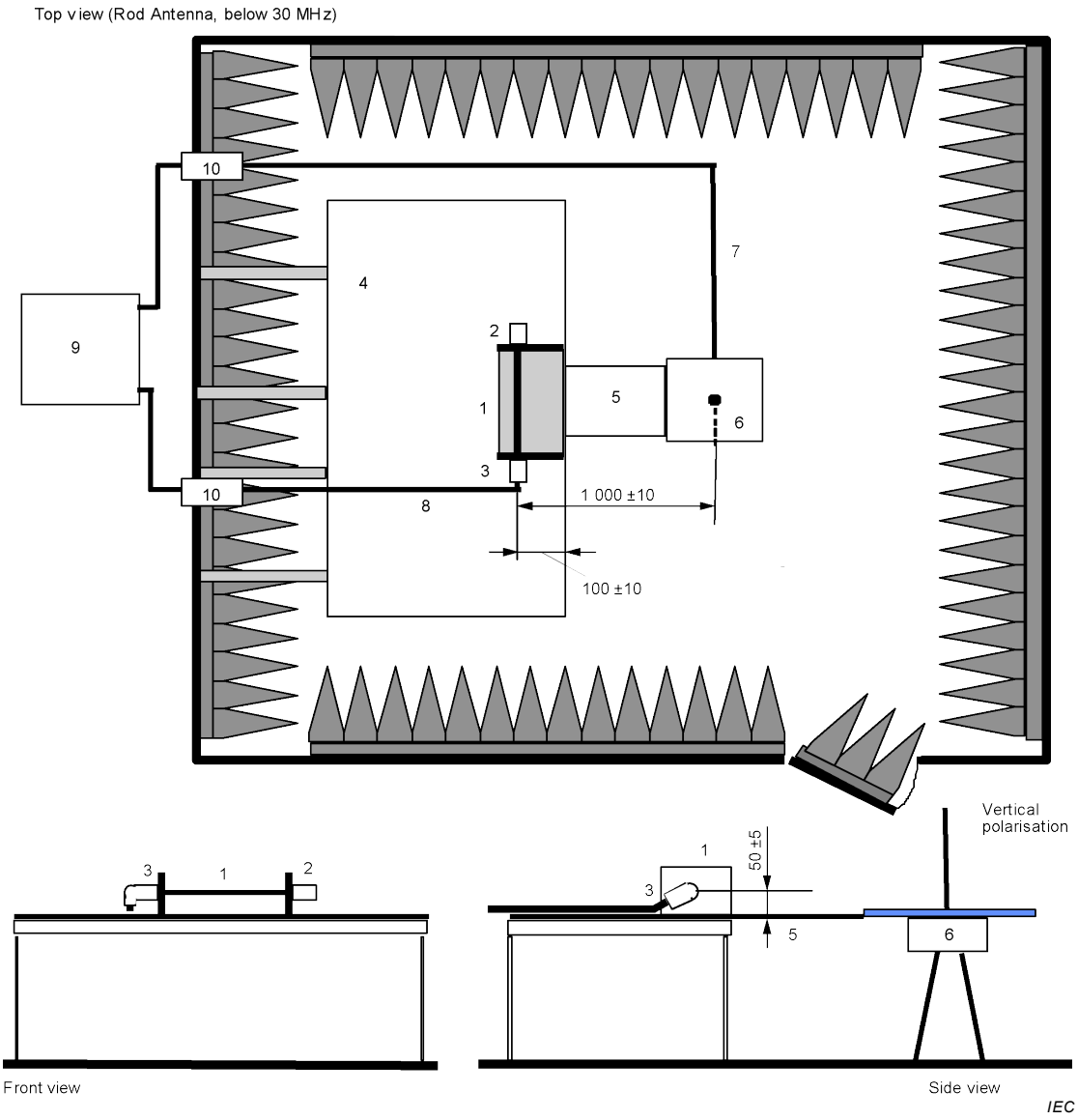

Key

1 Radiation source
2 50 Ω termination
3 10 dB attenuator
4 Reference ground plane
5 Grounding connection
6 Rod antenna
7 Cable from receiving antenna to measurement instrument (e.g. network analyser)
8 Cable from measurement instrument (e.g. network analyser) to radiator
9 Measurement instrument (e.g. network analyser)
10 Bulkhead connector

Figure J.12 – Example setup for ALSE equivalent field strength measurement (rod antenna shown for the frequency range below 30 MHz)

From the two values and the antenna factor of the receiving antenna (k_{AF}, in dB(1/m)), the equivalent field strength (E_{eq}, in dB(μV/m)) can be derived for each frequency:

$$E_{eq} = 120 \text{ dB}(\mu V) + (M_A - M_0) + k_{AF} \quad \text{(J.10)}$$

NOTE The equivalent field strength is the field strength that would be received, when a signal with 1 V rms is injected in the input of the 10 dB attenuator.

In case of the network analyser, which measures the scattering parameter S_{21} (in dB), the equivalent field strength ($E_{eq \text{ in dB}(\mu V/m)}$) can be derived as

$$E_{eq} = 120 \text{ dB}(\mu V) + S_{21} + k_{AF} \quad \text{(J.11)}$$

In the frequency range above 30 MHz, the measurements should be performed both for horizontal and vertical polarisations. The results are $E_{eq,horiz}$ and $E_{eq,vert}$.

For each frequency, the maximum equivalent field strength $E_{eq,max}$ is derived as maximum of the $E_{eq,horiz}$ and $E_{eq,vert}$.

For reliable results the noise floor should be at least 10 dB below the measured signal levels. This can be verified by connecting the receiving antenna to the receiving instrument but disconnecting the signal source from the radiation source.

J.3.3.3 Techniques used to generate the reference data

In the model below 30 MHz, the ground plane is a non-elevated ground plane (e.g. the floor of an ALSE, OATS or alternative test site) which is similar to the setup shown in Figure J.4 (using the long wire transmitting antenna instead of the transmitting monopole). In the model for 30 MHz and above, the standard size 2,5 m × 1 m reference ground plane is elevated and located in an ideal free field with perfectly conducting ground properties. Grounding of the elevated reference ground plane to the floor is achieved by using a single strap with a width of 100 mm which is centred on the centre point of the rear length of the reference ground plane. Calculations were done with a method of moments (MoM) code. As an example, Figure J.13 shows the computer model used for MoM in the frequency range 30 MHz to 200 MHz.

NOTE Comparative simulations have been done in the past with FDTD (Finite Difference Time Domain).

At frequencies below 30 MHz, the monopole antenna was part of the model since the connection between monopole antenna and the ground plane has an influence on the antenna factor. At frequencies above 30 MHz, the electric field strength, at the point where the receiving antennas reference point is located, has been used and is the maximum of vertical and horizontal polarisations.

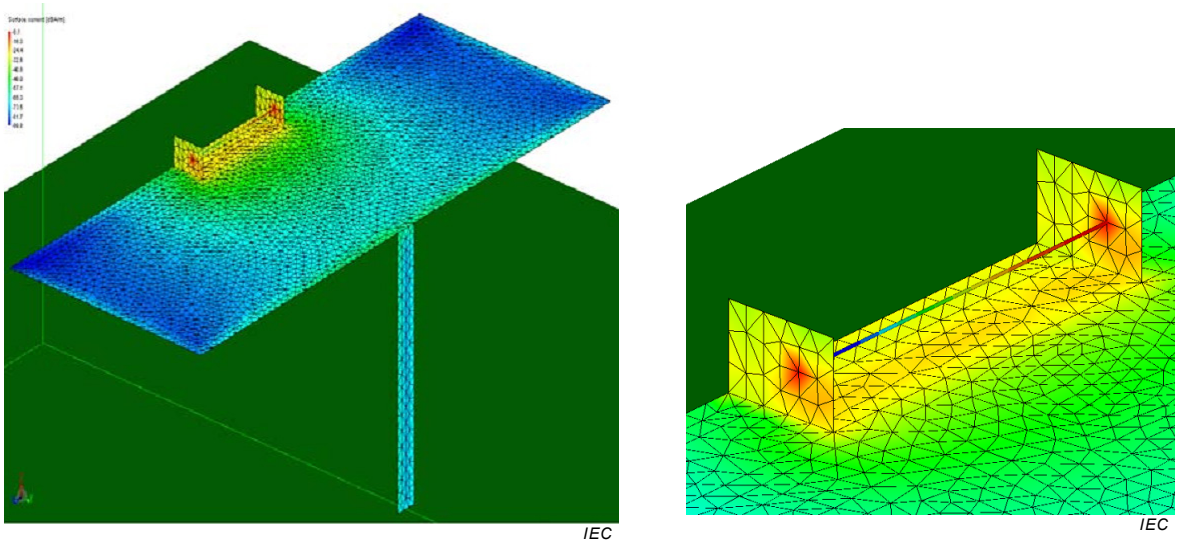

a) Complete model

b) Detail of the radiator

Figure J.13 – MoM-modell for the frequency range 30 MHz to 200 MHz

J.3.3.4 Reference data

The numbers shown in Table J.1 are used as the standard set of reference data. The information shown in Table J.1 is the numerical reference data that is compared to the equivalent field strength measurement data obtained in the ALSE being validated. These reference data are also applicable to evaluations of ALSEs that deviate in their setup from the configuration the modelling was based on. Hence, no further modelling is required and users need not perform their own simulations. Although modelling of a user's chamber is possible, only the numbers shown in Table J.1 are allowed to be used to determine chamber acceptance.

The simulation data already includes the 10 dB attenuator.

Table J.1 – Reference data to be used for chamber validation

Frequency range 150 kHz to 30 MHz		Frequency range 30 MHz to 200 MHz		Frequency range 200 MHz to 1 000 MHz	
Frequency MHz	$E_{eq,max,ref}$ dB(μV/m)	**Frequency** MHz	$E_{eq,max,ref}$ dB(μV/m)	**Frequency** MHz	$E_{eq,max,ref}$ dB(μV/m)
0,15	61,14	30	71,24	200	87,9
0,35	61,14	31	71,39	205	88,58
0,55	61,14	32	71,51	210	89,59
0,75	61,14	33	71,62	215	90,61
0,95	61,14	34	71,71	220	91,47
1,15	61,14	35	71,81	225	92,24
1,35	61,14	36	71,92	230	93,05
1,55	61,14	37	72,09	235	93,96
1,75	61,13	38	72,36	240	94,94
1,95	61,13	39	72,84	245	95,9
2,15	61,13	40	73,61	250	96,81
2,35	61,13	41	74,76	255	97,66
2,55	61,12	42	76,28	260	98,46
2,75	61,12	43	78,03	265	99,22
2,95	61,12	44	79,76	270	99,92
3,15	61,11	45	81,16	275	100,53
3,35	61,11	46	82,04	280	101,03
3,55	61,11	47	82,43	285	101,4
3,75	61,10	48	82,48	290	101,65
3,95	61,10	49	82,37	295	101,76
4,15	61,09	50	82,2	300	101,74
4,35	61,09	51	82,03	305	101,59
4,55	61,08	52	81,87	310	101,34
4,75	61,08	53	81,75	315	100,99
4,95	61,07	54	81,65	320	100,55
5,15	61,07	55	81,57	325	100,05
5,35	61,06	56	81,52	330	99,62
5,55	61,05	57	81,48	335	99,38
5,75	61,05	58	81,47	340	99,17
5,95	61,04	59	81,46	345	98,93
6,15	61,03	60	81,47	350	98,61
6,35	61,02	61	81,49	355	98,14
6,55	61,02	62	81,52	360	97,67
6,75	61,01	63	81,55	365	97,48
6,95	61,00	64	81,59	370	97,49
7,15	60,99	65	81,63	375	97,58
7,35	60,98	66	81,68	380	97,68
7,55	60,98	67	81,73	385	97,73
7,75	60,97	68	81,79	390	97,74
7,95	60,96	69	81,85	395	97,74

Frequency range 150 kHz to 30 MHz		**Frequency range 30 MHz to 200 MHz**		**Frequency range 200 MHz to 1 000 MHz**	
Frequency MHz	$E_{eq,max,ref}$ dB(μV/m)	**Frequency** MHz	$E_{eq,max,ref}$ dB(μV/m)	**Frequency** MHz	$E_{eq,max,ref}$ dB(μV/m)
8,15	60,95	70	81,91	400	97,78
8,35	60,94	71	81,97	405	97,86
8,55	60,93	72	82,03	410	97,96
8,75	60,92	73	82,1	415	98,07
8,95	60,91	74	82,17	420	98,19
9,15	60,90	75	82,24	425	98,33
9,35	60,89	76	82,31	430	98,48
9,55	60,88	77	82,38	435	98,64
9,75	60,86	78	82,45	440	98,8
9,95	60,85	79	82,53	445	98,95
10,15	60,84	80	82,61	450	99,06
10,35	60,83	81	82,69	455	99,11
10,55	60,82	82	82,77	460	99,09
10,75	60,81	83	82,85	465	98,99
10,95	60,79	84	82,94	470	98,86
11,15	60,78	85	83,03	475	98,72
11,35	60,77	86	83,12	480	98,59
11,55	60,76	87	83,22	485	98,49
11,75	60,74	88	83,32	490	98,38
11,95	60,73	89	83,42	495	98,25
12,15	60,72	90	83,53	500	98,12
12,35	60,70	91	83,64	505	97,97
12,55	60,69	92	83,75	510	97,74
12,75	60,67	93	83,87	515	97,54
12,95	60,66	94	83,99	520	97,55
13,15	60,65	95	84,11	525	97,43
13,35	60,63	96	84,23	530	97,24
13,55	60,62	97	84,35	535	97,15
13,75	60,60	98	84,47	540	97,22
13,95	60,59	99	84,59	545	97,36
14,15	60,57	100	84,71	550	97,33
14,35	60,56	101	84,83	555	96,96
14,55	60,54	102	84,94	560	96,3
14,75	60,52	103	85,05	565	95,59
14,95	60,51	104	85,15	570	94,92
15,15	60,49	105	85,25	575	94,26
15,35	60,48	106	85,35	580	93,6
15,55	60,46	107	85,43	585	92,94
15,75	60,44	108	85,52	590	92,33
15,95	60,43	109	85,59	595	91,8
16,15	60,41	110	85,67	600	91,34

Frequency range 150 kHz to 30 MHz		Frequency range 30 MHz to 200 MHz		Frequency range 200 MHz to 1 000 MHz	
Frequency MHz	$E_{eq,max,ref}$ dB(μV/m)	**Frequency** MHz	$E_{eq,max,ref}$ dB(μV/m)	**Frequency** MHz	$E_{eq,max,ref}$ dB(μV/m)
16,35	60,39	111	85,73	605	90,95
16,55	60,38	112	85,79	610	91,06
16,75	60,36	113	85,85	615	91,81
16,95	60,34	114	85,9	620	92,51
17,15	60,33	115	85,95	625	93,15
17,35	60,31	116	85,99	630	93,7
17,55	60,29	117	86,03	635	94,15
17,75	60,28	118	86,06	640	94,5
17,95	60,26	119	86,09	645	94,74
18,15	60,24	120	86,12	650	94,88
18,35	60,22	121	86,15	655	94,92
18,55	60,21	122	86,17	660	94,88
18,75	60,19	123	86,18	665	94,76
18,95	60,17	124	86,2	670	94,51
19,15	60,15	125	86,21	675	94,08
19,35	60,14	126	86,22	680	94,55
19,55	60,12	127	86,22	685	95,18
19,75	60,10	128	86,22	690	95,8
19,95	60,08	129	86,22	695	96,14
20,15	60,07	130	86,22	700	95,98
20,35	60,05	131	86,21	705	95,85
20,55	60,03	132	86,2	710	95,83
20,75	60,02	133	86,18	715	95,69
20,95	60,00	134	86,16	720	95,28
21,15	59,98	135	86,14	725	94,8
21,35	59,96	136	86,12	730	94,65
21,55	59,95	137	86,09	735	94,71
21,75	59,93	138	86,06	740	94,86
21,95	59,91	139	86,03	745	95,23
22,15	59,90	140	85,99	750	95,8
22,35	59,88	141	85,95	755	96,4
22,55	59,87	142	85,9	760	96,89
22,75	59,85	143	85,85	765	97,24
22,95	59,83	144	85,8	770	97,47
23,15	59,82	145	85,75	775	97,61
23,35	59,80	146	85,69	780	97,7
23,55	59,79	147	85,63	785	97,73
23,75	59,77	148	85,56	790	97,71
23,95	59,76	149	85,49	795	97,63
24,15	59,74	150	85,41	800	97,49
24,35	59,73	151	85,33	805	97,3

Frequency range 150 kHz to 30 MHz		**Frequency range 30 MHz to 200 MHz**		**Frequency range 200 MHz to 1 000 MHz**	
Frequency MHz	$E_{eq,max,ref}$ dB(μV/m)	**Frequency** MHz	$E_{eq,max,ref}$ dB(μV/m)	**Frequency** MHz	$E_{eq,max,ref}$ dB(μV/m)
24,55	59,72	152	85,24	810	97,08
24,75	59,70	153	85,14	815	96,84
24,95	59,69	154	85,04	820	96,61
25,15	59,68	155	84,93	825	96,39
25,35	59,67	156	84,82	830	96,19
25,55	59,66	157	84,69	835	96
25,75	59,65	158	84,55	840	95,86
25,95	59,63	159	84,41	845	95,56
26,15	59,62	160	84,25	850	96,51
26,35	59,62	161	84,07	855	97,5
26,55	59,61	162	83,88	860	98,42
26,75	59,60	163	83,68	865	99,23
26,95	59,59	164	83,45	870	99,9
27,15	59,58	165	83,21	875	100,51
27,35	59,58	166	83,02	880	101,09
27,55	59,57	167	83,28	885	101,61
27,75	59,56	168	83,54	890	102,09
27,95	59,56	169	83,8	895	102,54
28,15	59,56	170	84,05	900	102,95
28,35	59,55	171	84,29	905	103,31
28,55	59,55	172	84,53	910	103,6
28,75	59,55	173	84,77	915	103,84
28,95	59,55	174	85	920	104,03
29,15	59,55	175	85,22	925	104,18
29,35	59,55	176	85,44	930	104,26
29,55	59,55	177	85,65	935	104,28
29,75	59,55	178	85,86	940	104,24
29,95	59,55	179	86,06	945	104,14
		180	86,26	950	104
		181	86,44	955	103,84
		182	86,62	960	103,68
		183	86,78	965	103,53
		184	86,94	970	103,39
		185	87,07	975	103,27
		186	87,2	980	103,17
		187	87,31	985	103,08
		188	87,4	990	102,98
		189	87,48	995	102,86
		190	87,54	1 000	102,69
		191	87,6		
		192	87,64		

Frequency range 150 kHz to 30 MHz		Frequency range 30 MHz to 200 MHz		Frequency range 200 MHz to 1 000 MHz	
Frequency MHz	$E_{eq,max,ref}$ dB(μV/m)	**Frequency** MHz	$E_{eq,max,ref}$ dB(μV/m)	**Frequency** MHz	$E_{eq,max,ref}$ dB(μV/m)
		193	87,67		
		194	87,69		
		195	87,72		
		196	87,74		
		197	87,77		
		198	87,81		
		199	87,87		

J.3.3.5 Deviation of the ALSE measurement from the reference data

The deviation of the measurement data obtained in J.3.3.2 from the reference values given in Table J.1 is calculated for each frequency.

$$\Delta_{\text{Long Wire Method}} = E_{\text{eq,max}} - E_{\text{eq,max,ref}} \ \Delta \quad \text{in dB} \tag{J.12}$$

where

$E_{\text{eq,max}}$ is the maximum field measured at a particular frequency (maximum of both horizontal and vertical antenna polarizations where applicable, see J.3.3.2);

$E_{\text{eq,max,ref}}$ is the modelled reference field as shown in Table J.1 at the same frequency as $E_{\text{eq,max}}$

J.3.4 Requirements

To determine compliance, calculate the total percentage of data points within the ±6 dB requirement over the entire frequency range of 150 kHz to 1 000 MHz ($Total\ \%IT_{\text{150 kHz to 1 000 MHz Long Wire Method}}$) by:

$$Total\ \%IT_{\text{150 kHz to 1000 MHz, Long Wire Method}} = \left(\frac{\text{data points 150 kHz to 1 000 MHz where } \Delta_{\text{Long Wire Method}} \text{ is within } \pm 6 \text{ dB}}{481} \right) \times 100 \tag{J.13}$$

where

data points 150 kHz to 1 000 MHz, where $\Delta_{\text{Long Wire Method}}$ is within ±6 dB is the number of frequencies where $\Delta_{\text{Long Wire Method}}$ is within ±6 dB as evaluated in J.3.3.5.

The ALSE and its installation (physical layout, reference ground plane size, reference ground plane grounding, RF absorber, etc.) is compliant with the requirements of this validation method if $Total\ \%IT_{\text{150 kHz to 1 000 MHz Long Wire Method}}$ is ≥ 90 %. This compliance may be included in a statement in the test report.

Note that only those frequency ranges (see Table J.1) need to be considered, for which the ALSE is to be used, in which case the value 481 in Equation (J.13) will be replaced by the total number of points for the reduced frequency range.

The difference between the reference and ALSE measurements will not be used

- as a correction factor for emissions measurements of an EUT, or
- to produce an antenna factor for the Receiving antenna.

Annex K
(informative)

Items under consideration

K.1 General

This annex contains future work items that are under consideration.

K.2 Measurement techniques and limits

As further work progresses in CISPR A, CISPR H and Technical committee 69 this will be reviewed and CISPR 25 updated accordingly.

K.3 Measurement uncertainty

This topic will be considered for future revisions of this standard.

K.4 Reconsideration of the Scope of the standard

This topic will be considered for future revisions of this standard.

K.5 Digital Service bands

This topic will include frequency bands, measurement bandwidths and limits to be considered for future revisions of this standard. Digital service bands may include (but are not limited to) services as digital radio, digital TV, mobile radio, ITS, Wi-Fi, etc.

K.6 Reorganizing the document into separate parts similar to CISPR-16 document series

This topic will be considered for future revisions of this standard.

Bibliography

[1] GAMAUF K. J. and HARTMAN W. J., *Objective Measurement of Voice Channel Intelligibility*, October 1977; available from the National Technical Information Service, Springfield, Virginia 22151, USA, reference number FAA-RD-77-153.

[2] CISPR 22, *Information technology equipment – Radio disturbance characteristics – Limits and methods of measurement*

[3] ITU-R BS.1284-1, *General methods for the subjective assessment of sound quality*

[4] IEEE STD 1128-1998, *IEEE Recommended Practice for Radio Frequency (RF) Absorber – Evaluation in the Range of 30 MHz to 5 GHz*

[5] IEC 60050-161:1990, *International Electrotechnical Vocabulary – Chapter 161: Electromagnetic compatibility*
IEC 60050-161:1990/AMD1:1997
IEC 60050-161:1990/AMD2:1998
IEC 60050-161:1990/AMD3:2014
IEC 60050-161:1990/AMD4:2014
IEC 60050-161:1990/AMD5:2015

[6] CISPR 12:2007, *Vehicles, boats and internal combustion engine-driven devices – Radio disturbance characteristics – Limits and methods of measurement for the protection of off-board receivers*
CISPR 12:2007/AMD1:2009

[7] CISPR 16-2-3:2010, *Specification for radio disturbance and immunity measuring apparatus and methods – Part 2-3: Methods of measurement of disturbances and immunity – Radiated disturbance measurements*
CISPR 16-2-3:2010/AMD1:2010
CISPR 16-2-3:2010/AMD2:2014

[8] Dr Luke Turnbull, *The Groundplane Resonance – Problems With Radiated Emissions Measurements below 30 MHz*, Automotive EMC Conference, Newbury UK, 2007 (http://www.conekt.co.uk/news-and-events/92-emc-groundplane-paper)

[9] Alexander Kriz, Wolfgang Müllner, Friedrich-Wilhelm Trautnitz, Jochen Riedelsheimer, Herbert Seitl, *Messtechnische Untersuchung des Einflusses der Erdung von CISPR-25-Emissionsmessplätzen*, Test Kompendium 2004, Messen-Prüfen-Verifizieren, publish-industry Verlag GmbH, München, 2003. http://www.seibersdorf-rf.com

[10] Alexander Kriz, Wolfgang Müllner, *An Accurate Validation Procedure For Component Testing Chambers,* Compliance Engineering, 2002 November/December 2002, Page 40-43. http://www.seibersdorf-rf.com

[11] Alexander Kriz, Wolfgang Müllner, *Analysis of the CISPR 25 Component Test Setup*, 2003. International Symposium on Electromagnetic Compatibility (EMC), Istanbul, Turkey. http://www.seibersdorf-rf.com

[12] Bongartz, Deckers, Heina, Hirsch, Mooser, Nickel, Seiger, *Proposal for the Validation of Absorber Lined Shielded Enclosures for CISPR 25 Emission Tests*, IEEE Symposium on EMC, Austin, USA, August, 17th-21st, 2009

[13] Frédéric Lafon, Renaud Dupendant, Josselin Davalan, *Investigation on dispersion between CISPR 25 chambers for radiated emissions below 100 MHz*, EMC Europe 2014, Gothenburg, Sweden, September, 1st-4th 2014

_____